ATTACHMENT B - MANUFACTURER INFORMATION

1 - GORMAN RUPP CENTRIFUGAL PUMP

2 - GORMAN RUPP CHECK VALVES

3 - SEAMETRICS ELECTROMAG FLOWMETER

4 - VEGAPULS 62 Radar Level Instrument

1 - GORMAN RUPP CENTRIFUGAL PUMP

County of Napa

Steele Canyon Road

Sewer Lift Station

05/22/2019

4916 E. Ashlan Ave. Fresno, CA 93726
Phone (559) 291-9701 Fax (559) 291-2134
www.bogiespumpsystems.com

Gorman Rupp

Ultra V

VS3A60-B

4916 E. Ashlan Ave. Fresno, CA 93726
Phone (559) 291-9701 Fax (559) 291-2134
www.bogiespumpsystems.com

VS3A60-B Self Priming Pump

Suction	4" (100 mm)
Discharge	3" (80 mm)
Solids Handling	2.5" (64 mm)
Casing	Cast Iron
Impeller/Rotor	Ductile Iron
Seal Material	Silicon Carbide
Flange	ASA
Drive Type	Basic
Unit Weight	1085 lbs

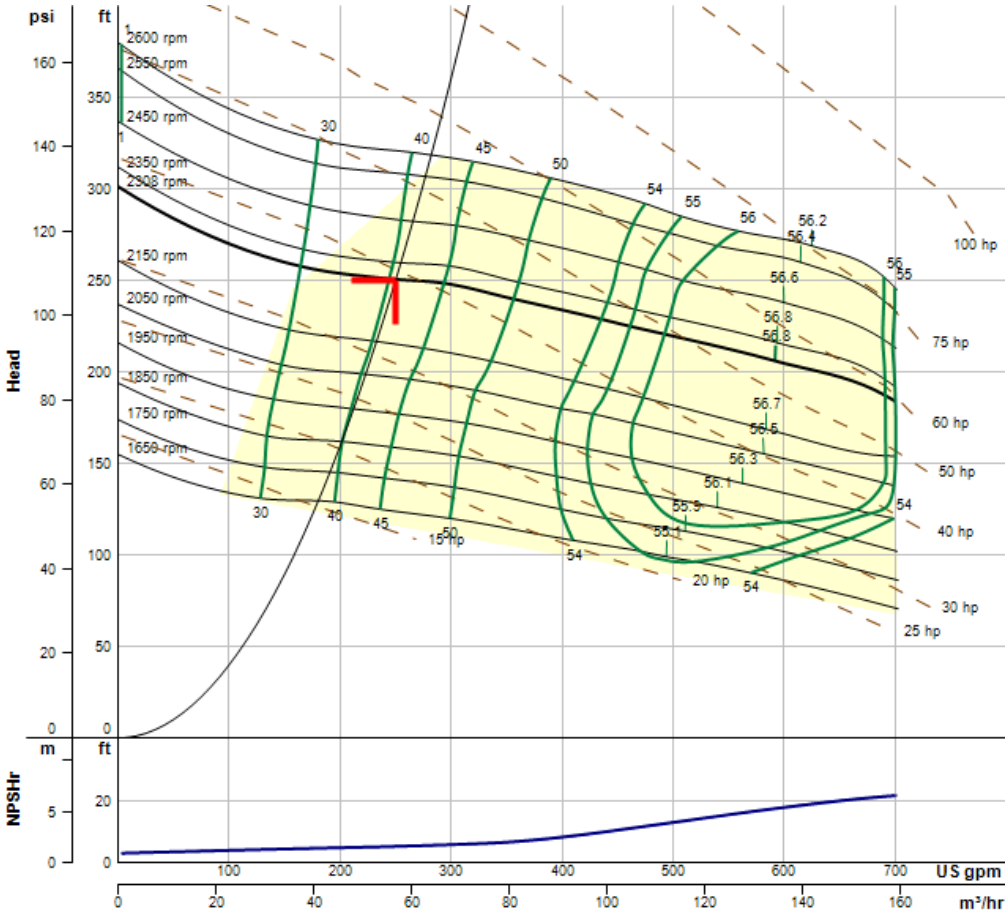

Curve Info	
Type	V&VS-SERIES
Size	VS3A-B-1
Curve	VS3A-B-1
Impeller	38615-103
Speed	2308 rpm
Diameter	9 in

Data Point		
Flow	250	US gpm
Head	251	ft
NPSHr	5.24	ft
Efficiency	41	%
Power	39	hp

This curve is provided for preliminary selection only. Please consult factory before making final pump or motor selections.

GORMAN-RUPP PUMPS	PRODUCT ENGINEERING "V" BELT DATA SHEET JOB NO.	PDR NO. EDR8060 PAGE 1 of 1 DATE 05/15/19	COMPUTED BY Andy Donelson APPROVED BY

CUSTOMER Bogies Pump Systems

SALES Jamie Back MATE RPM 2308

PUMP VS3A60-B HP N/A SHAFT DIA 1.50 x .38 RPM 2308

MOTOR FRAME 326T HP 50.0 SHAFT DIA 2.12 X .50 RPM 1780

SERVICE FACTOR 1.25 DESIGN HP 62.5 / 2 = 31.3 RATIO 1.297

BASE 41544-506 BASE TYPE RH Horizontal 1 Motor

BELT GUARD 42354-508 ** CD 35.40 MAXIMUM SHEAVE 14.50

COUPLING GUARD N/A QTY MINIMUM SHEAVE #N/A

PUMP SHEAVE 5V0750OD2GR PUMP BUSHING 24131- 571 SK

MATE SHEAVE 5V0750OD2GR MATE BUSHING 24131- 571 SK

MOTOR SHEAVE 5V0975OD5GR QTY 1 MOTOR BUSHING 24131- 520 QTY 1 E

** IDLER KIT N/A IDLER SHEAVE N/A

ACTUAL RATIO 1.30 ACTUAL RPM 2314

BELTS REQUIRED 4 TYPE 5VX1000

HP PER BELT 29.00

TOTAL HP THRU BELTS 116.0 / 2 = 58.0

CORRECTION FACTOR .95

CORRECTED HP 110.2 / 2 = 55.1

ACTUAL CENTER DISTANCE 36.40

PUMP COUPLING HALF N/A MOTOR HALF N/A SLEEVE N/A

REMARKS:

DISCHARGE LOCATION OPTIONS: 9 OR 12 O'CLOCK FACING SUCTION

** ADD 1.00 INCH TO CENTER DISTANCE WHEN USING AN IDLER KIT

B 18344

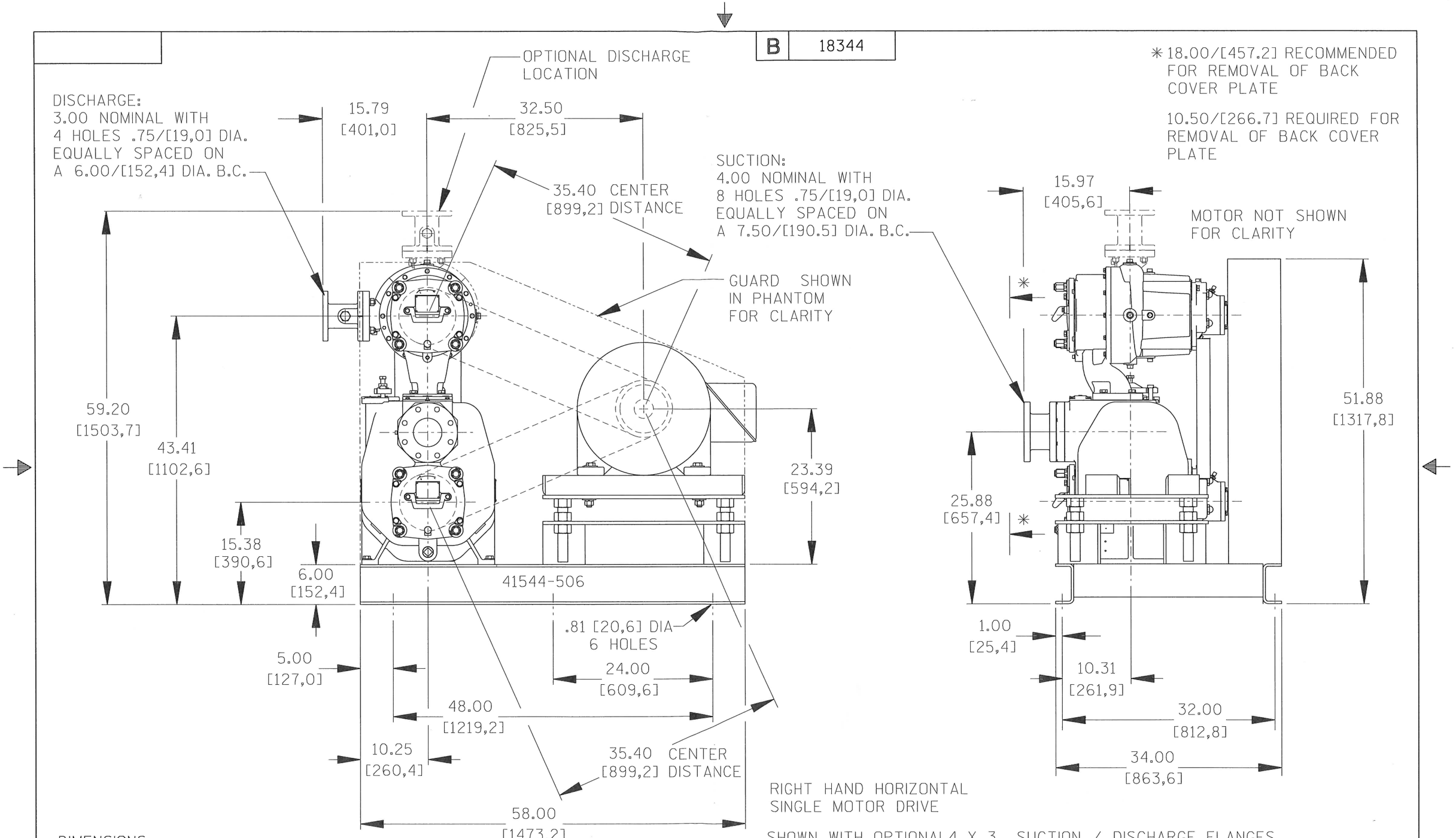

DIMENSIONS:
INCHES
[MILLIMETERS]

THE GORMAN-RUPP CO. MANSFIELD, OHIO ST. THOMAS, ONTARIO	DRAWN BY CSI	SCALE 5/64	MODEL VS3A-B / VS3B-B
	DATE 5-31-06	REVISED	OUTLINE NUMBER 18344

Self Priming Centrifugal Pumps

Ultra V Series® Basic Pump w/UltraMate® Second Stage

Model VS3A60-B

Size 4" x 3"

VARIOUS PATENTS APPLY

PUMP SPECIFICATIONS

Size: 4" x 3" (102 mm x 76 mm) – Flanged.**
Casings: Gray Iron 30.
Maximum Operating Pressure 249 psi (1717 kPa).*
Semi-Open Type, Two Vane Impellers: Ductile Iron 65-45-12.
Handles 2-1/2" (63,5 mm) Diameter Spherical Solids.
Impeller Shafts: Alloy Steel 4150.
Self-Cleaning Replaceable Wear Plates: Carbon Steel 1015.
Shimless Adjustable Cover Plates: Gray Iron 30.
Suction Flange: Gray Iron 30.
Bearing Housings: Gray Iron 30.
Seal Plates: Gray Iron 30.
Shaft Sleeves: Alloy Steel 4130.
Radial Bearings: Open Single Row Ball.
Thrust Bearings: Open Double Row Ball.
Bearing and Seal Cavity Lubrication: SAE 30 Non-Detergent Oil.
Gaskets: Buna-N, Compressed Synthetic Fibers, Vegetable Fiber, PTFE, Cork, and Rubber.
O-Rings: Buna-N.
Transition Chamber: Ductile Iron 65-45-12.
Hardware: Standard Plated Steel.
Brass Pressure Relief Valves.
Bearing and Seal Cavity Oil Level Sight Gauges.
Optional Equipment: Automatic Air Release Valve. High Pump Temperature Shutdown Kit. Stainless Steel/G-R Hard Iron Impellers, Wear Plates and Seal Plates. 120/240 Volt Casing Heater.
** Optional Gray Iron 30 Flange Kits Available as Follows (See Price Sheets):
3" Female NPT Discharge Flange Kit.
4" and 3" ASA Suction/Discharge Spool Flange Kits.
100 mm and 80 mm DIN 2527 (PN 16) Suction/Discharge Spool Flange Kits.

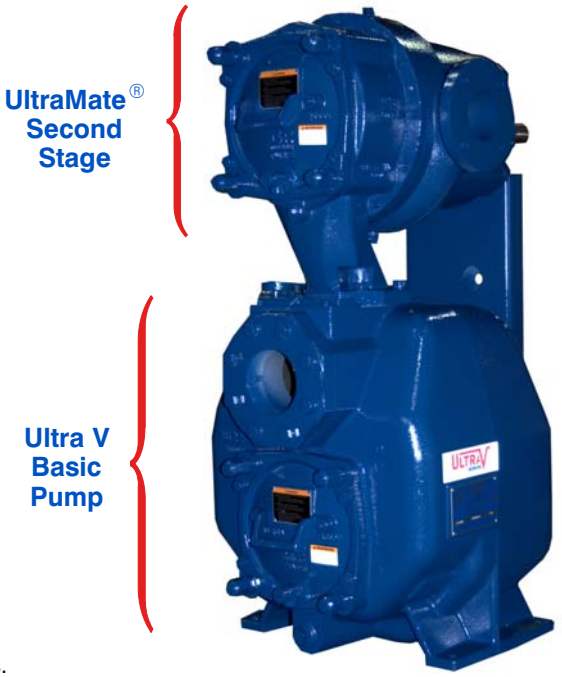

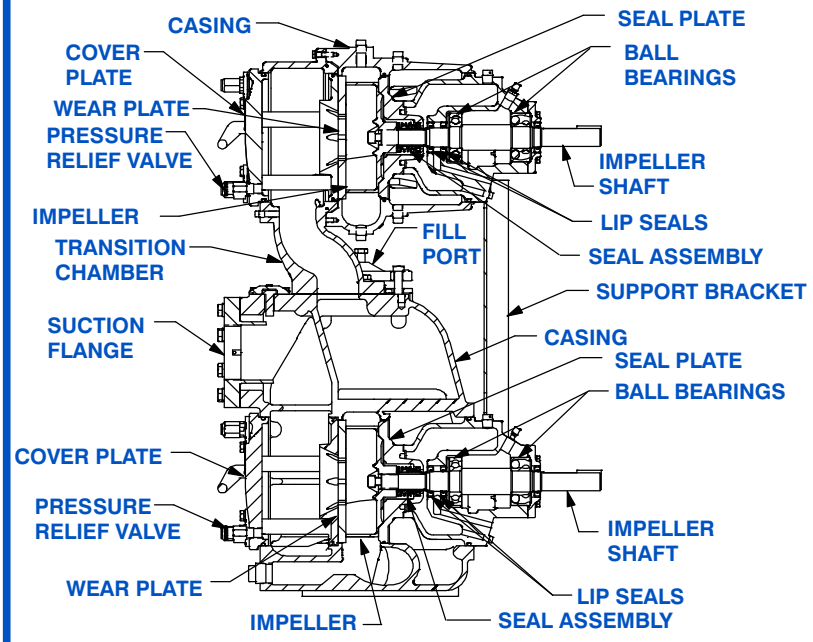

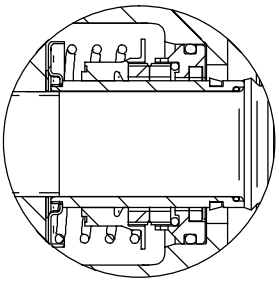

SEAL DETAIL

Cartridge Type, Mechanical, Oil-Lubricated, Double Floating, Self-Aligning. Silicon Carbide Rotating and Stationary Faces. Stainless Steel 316 Stationary Seat. Fluorocarbon Elastomers (DuPont Viton® or Equivalent). Stainless Steel 18-8 Cage and Spring. Maximum Temperature of Liquid Pumped, 160°F (71°C).*

*** Consult Factory for Applications Exceeding Maximum Pressure and/or Temperature Indicated.***

© Copyright Gorman-Rupp Pumps 2014

Specification Data	APPROXIMATE DIMENSIONS and WEIGHTS	NET WEIGHT: 1040 LBS. (472 KG.)*
SECTION 55, PAGE 3000		SHIPPING WEIGHT: 1175 LBS. (533 KG.)*
		EXPORT CRATE: 42.9 CU. FT. (1,2 CU. M.)
		*WEIGHTS DO NOT INCLUDE OPTIONAL FLANGE KITS.

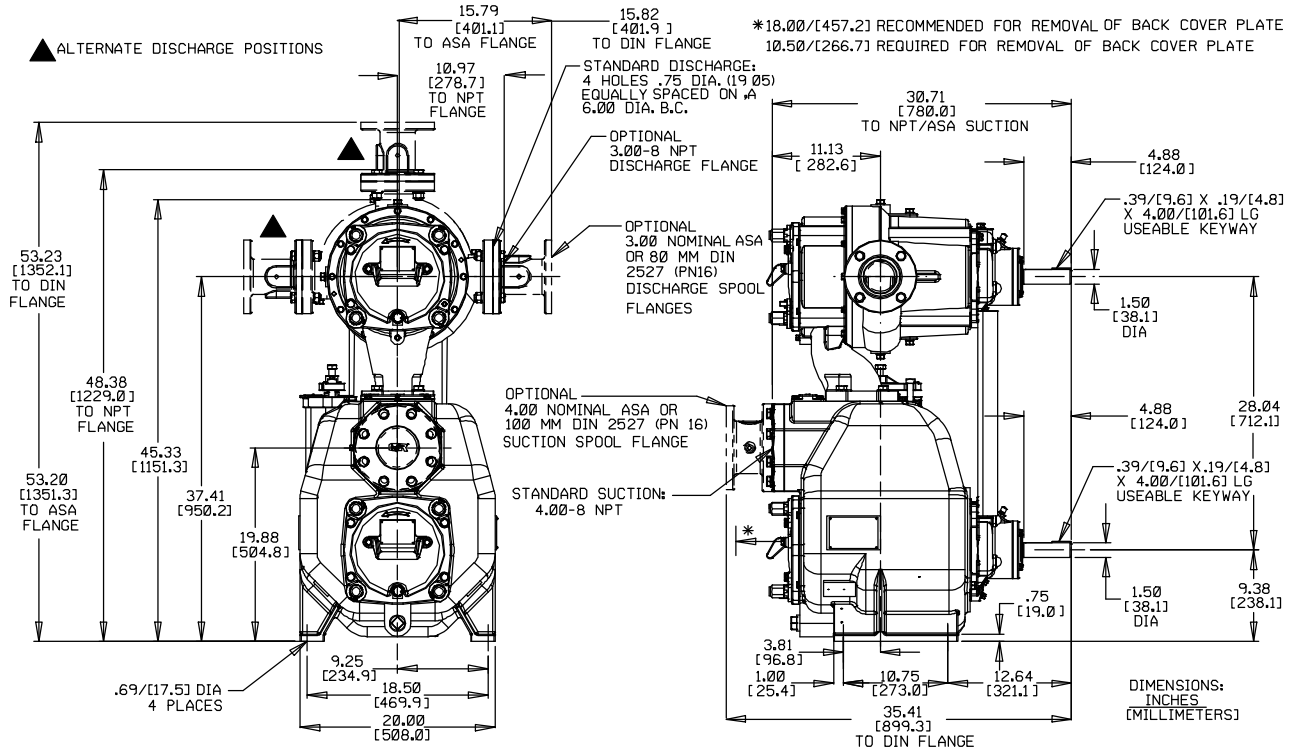

OPTIONAL SUCTION & DISCHARGE FLANGES SHOWN IN PHANTOM

TOTAL COMBINED H.P. SHOWN

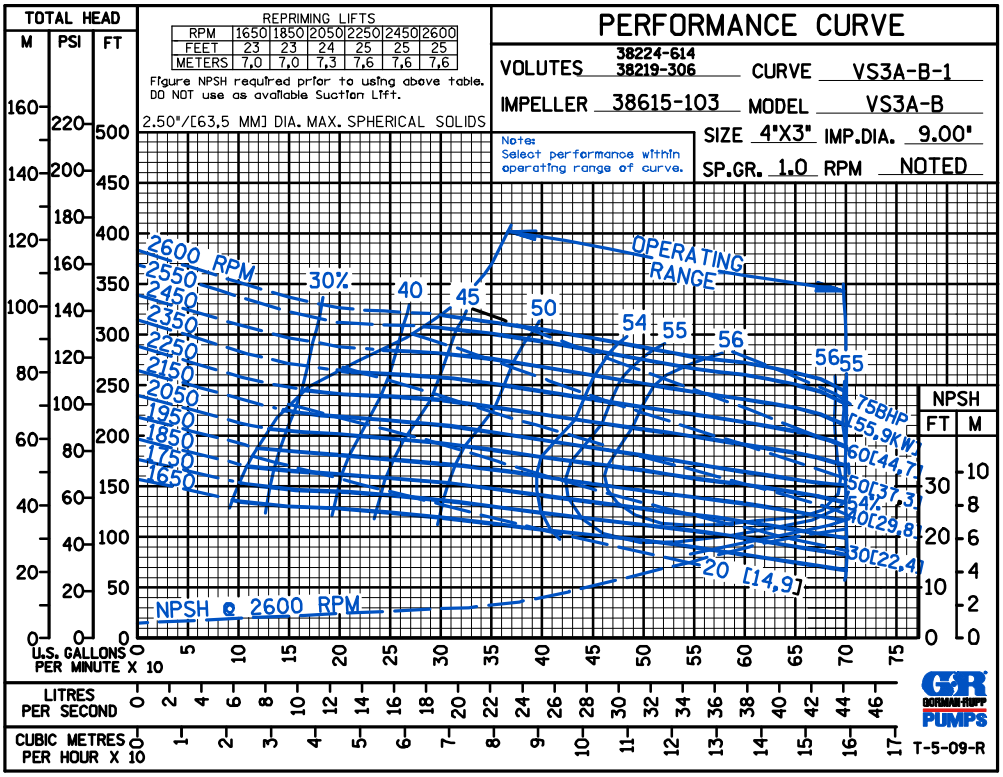

© Copyright Gorman-Rupp Pumps 2014

TOTAL COMBINED H.P. SHOWN

PERFORMANCE BASED ON WATER

TRIMMED IMPELLER

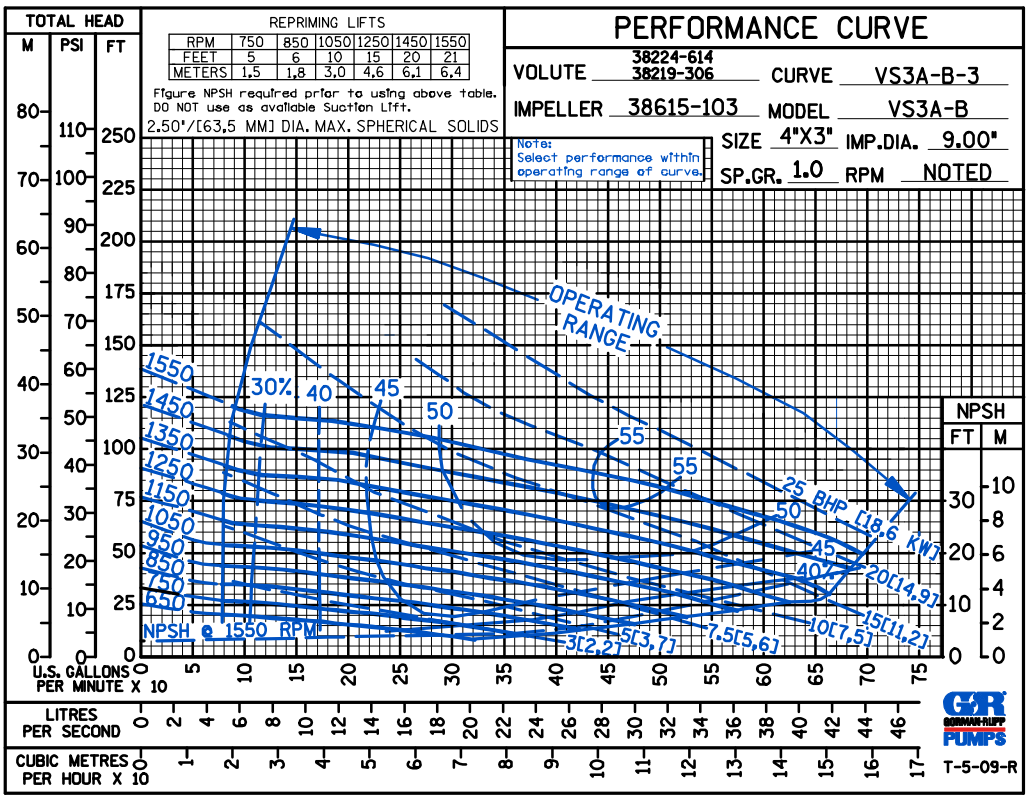

© Copyright Gorman-Rupp Pumps 2014

VS3A60-B

Installation, Operation

And Maintenance Manual

4916 E. Ashlan Ave. Fresno, CA 93726
Phone (559) 291-9701 Fax (559) 291-2134
www.bogiespumpsystems.com

OM—06012—02
April 16, 2007
Rev. C 01-14-19

INSTALLATION, OPERATION, AND MAINTENANCE MANUAL

WITH PARTS LIST

GORMAN-RUPP PUMPS

ULTRA V PUMP

MODEL
VS3A60—B
INCLUDING: /WW

GORMAN-RUPP PUMPS

www.grpumps.com

©2002 Gorman-Rupp Pumps

Printed in U.S.A.

Register your new
Gorman-Rupp pump online at
www.grpumps.com

Valid serial number and e-mail address required.

RECORD YOUR PUMP MODEL AND SERIAL NUMBER

Please record your pump model and serial number in the spaces provided below. Your Gorman-Rupp distributor needs this information when you require parts or service.

Pump Model: _____

Serial Number: _____

TABLE OF CONTENTS

INTRODUCTION . . . . . PAGE I — 1

SAFETY — SECTION A . . . . . PAGE A — 1

INSTALLATION — SECTION B . . . . . PAGE B — 1

Pump Dimensions . . . . . PAGE B — 1
PREINSTALLATION INSPECTION . . . . . PAGE B — 1
POSITIONING PUMP . . . . . PAGE B — 1
Lifting . . . . . PAGE B — 1
Mounting . . . . . PAGE B — 2
Clearance . . . . . PAGE B — 2
SUCTION AND DISCHARGE PIPING . . . . . PAGE B — 2
Materials . . . . . PAGE B — 2
Line Configuration . . . . . PAGE B — 2
Connections to Pump . . . . . PAGE B — 2
Gauges . . . . . PAGE B — 2
SUCTION LINES . . . . . PAGE B — 2
Fittings . . . . . PAGE B — 2
Strainers . . . . . PAGE B — 3
Sealing . . . . . PAGE B — 3
Suction Lines In Sumps . . . . . PAGE B — 3
Suction Line Positioning . . . . . PAGE B — 3
DISCHARGE LINES . . . . . PAGE B — 4
Siphoning . . . . . PAGE B — 4
Valves . . . . . PAGE B — 4
Bypass Lines . . . . . PAGE B — 4
AUTOMATIC AIR RELEASE VALVE . . . . . PAGE B — 5
Air Release Valve Installation . . . . . PAGE B — 6
DRIVE ARRANGEMENTS . . . . . PAGE B — 7
Dual Motor Drives . . . . . PAGE B — 7
Single Motor Belt Drives . . . . . PAGE B — 7
Single Motor Combination Drives . . . . . PAGE B — 8
HIGH PUMP TEMPERATURE SHUTDOWN FOR STAGED APPLICATIONS . . . . . PAGE B — 9
ALIGNMENT . . . . . PAGE B — 9
Coupled Drives . . . . . PAGE B — 9
Drive Belts . . . . . PAGE B — 10
DRIVE BELT TENSIONING . . . . . PAGE B — 10
General Rules of Tensioning . . . . . PAGE B — 10

OPERATION — SECTION C . . . . . PAGE C — 1

PRIMING . . . . . PAGE C — 1
STARTING . . . . . PAGE C — 1
Rotation . . . . . PAGE C — 1
OPERATION . . . . . PAGE C — 2
Lines With a Bypass . . . . . PAGE C — 2
Lines Without a Bypass . . . . . PAGE C — 2
Leakage . . . . . PAGE C — 2
Liquid Temperature And Overheating . . . . . PAGE C — 2
Strainer Check . . . . . PAGE C — 3

TABLE OF CONTENTS
(continued)

Pump Vacuum Check ..... PAGE C – 3
STOPPING ..... PAGE C – 3
Cold Weather Preservation ..... PAGE C – 3
BEARING TEMPERATURE CHECK ..... PAGE C – 3

TROUBLESHOOTING – SECTION D ..... PAGE D – 1

PREVENTIVE MAINTENANCE ..... PAGE D – 3

PUMP MAINTENANCE AND REPAIR – SECTION E ..... PAGE E – 1

PERFORMANCE CURVE ..... PAGE E – 1
PARTS LISTS:
VS3A60–B And VS3A60–B /WW Pump Models ..... PAGE E – 3
Pump Assemblies 46167–037 And 46146–038 ..... PAGE E – 5
Ultra Mate Pump Assembly ..... PAGE E – 7
Repair Rotating Assemblies ..... PAGE E – 9
PUMP AND SEAL DISASSEMBLY AND REASSEMBLY ..... PAGE E – 10
Support Plate Removal ..... PAGE E – 11
Back Cover And Wear Plate Removal ..... PAGE E – 11
Rotating Assembly Removal ..... PAGE E – 11
Impeller Removal ..... PAGE E – 12
Seal Removal ..... PAGE E – 12
Shaft and Bearing Removal and Disassembly ..... PAGE E – 13
Pump Casing and Transition Chamber Removal ..... PAGE E – 14
Pump Casing and Transition Chamber Installation ..... PAGE E – 14
Shaft and Bearing Reassembly and Installation ..... PAGE E – 14
Seal Installation ..... PAGE E – 16
Impeller Installation And Adjustment ..... PAGE E – 19
Rotating Assembly Installation ..... PAGE E – 19
Back Cover Installation And Adjustment ..... PAGE E – 19
PRESSURE RELIEF VALVE MAINTENANCE ..... PAGE E – 20
Final Pump Assembly ..... PAGE E – 21
LUBRICATION ..... PAGE E – 21
Seal Assembly ..... PAGE E – 21
Bearings ..... PAGE E – 21
Power Source ..... PAGE E – 21

INTRODUCTION

Thank You for purchasing a Gorman-Rupp pump. **Read this manual** carefully to learn how to safely install and operate your pump. Failure to do so could result in personal injury or damage to the pump.

Ultra V Series pumps are designed for handling liquids containing large entrained solids and slurries. The basic material of construction for Ultra V Series pumps is cast iron, with ductile iron impeller and steel wearing parts.

This manual will alert personnel to known procedures which require special attention, to those which could damage equipment, and to those which could be dangerous to personnel. However, this manual cannot possibly anticipate and provide detailed precautions for every situation that might occur during maintenance of the unit. Therefore, it is the responsibility of the owner/maintenance personnel to ensure that **only** safe, established maintenance procedures are used, and that any procedures not addressed in this manual are performed **only** after establishing that neither personal safety nor pump integrity are compromised by such practices.

For information or technical assistance on the power source, contact the power source manufacturer's local dealer or representative.

If there are any questions regarding the pump or its application which are not covered in this manual or in other literature accompanying this unit, please contact your Gorman-Rupp distributor, or:

The Gorman-Rupp Company
P.O. Box 1217
Mansfield, Ohio 44901—1217
Phone: (419) 755—1011
or:
Gorman-Rupp of Canada Limited
70 Burwell Road
St. Thomas, Ontario N5P 3R7
Phone: (519) 631—2870

The following are used to alert maintenance personnel to procedures which require special attention, to those which could damage equipment, and to those which could be dangerous to personnel:

DANGER!

Immediate hazards which WILL result in severe personal injury or death. These instructions describe the procedure required and the injury which will result from failure to follow the procedure.

WARNING!

Hazards or unsafe practices which COULD result in severe personal injury or death. These instructions describe the procedure required and the injury which could result from failure to follow the procedure.

CAUTION

Hazards or unsafe practices which COULD result in minor personal injury or product or property damage. These instructions describe the requirements and the possible damage which could result from failure to follow the procedure.

NOTE

Instructions to aid in installation, operation, and maintenance or which clarify a procedure.

SAFETY — SECTION A

This information applies to Ultra V Series pumps. Gorman-Rupp has no control over or particular knowledge of the power source which will be used. Refer to the manual accompanying the power source before attempting to begin operation.

Because pump installations are seldom identical, this manual cannot possibly provide detailed instructions and precautions for each specific application. Therefore, it is the owner/installer's responsibility to ensure that applications not addressed in this manual are performed only after establishing that neither operator safety nor pump integrity are compromised by the installation.

WARNING!

Before attempting to open or service the pump:

1. **Familiarize yourself with this manual.**
2. **Disconnect or lock out the power source to ensure that the pump will remain inoperative.**
3. **Allow the pump to completely cool if overheated.**
4. **Check the temperature before opening any covers, plates, or plugs.**
5. **Close the suction and discharge valves.**
6. **Vent the pump slowly and cautiously.**
7. **Drain the pump.**

WARNING!

This pump is designed to handle liquids containing large entrained solids or slurries. Do not attempt to pump volatile, corrosive, or flammable materials which may damage the pump or endanger personnel as a result of pump failure.

WARNING!

After the pump has been positioned, make certain that the pump and all piping connections are tight, properly supported and secure before operation.

WARNING!

Do not operate the pump without the guards in place over the rotating parts. Exposed rotating parts can catch clothing, fingers, or tools, causing severe injury to personnel.

WARNING!

Do not remove plates, covers, gauges, pipe plugs, or fittings from an overheated pump. Vapor pressure within the pump can cause parts being disengaged to be ejected with great force. Allow the pump to completely cool before servicing.

WARNING!

Do not operate the pump against a closed discharge valve for long periods of time. If operated against a closed discharge valve, pump components will deteriorate, and the liquid could come to a boil, build pressure, and cause the pump casing to rupture or explode.

WARNING!

Death or serious personal injury and damage to the pump or components

can occur if proper lifting procedures are not observed. Make certain that hoists, chains, slings or cables are in good working condition and of sufficient capacity and that they are positioned so that loads will be balanced and the pump or components will not be damaged when lifting. Suction and discharge hoses and piping must be removed from the pump before lifting. Lift the pump or component only as high as necessary and keep personnel away from suspended objects.

WARNING!

Do not install a suction check valve in the first stage of the VS Series pump model. Installing a suction check valve in the first stage of the VS Series pump model can cause over-pressurization of the first stage pump casing, resulting in possible explosion of the pump and serious injury or death to presonnel.

WARNING!

Do not attempt to disengage any part of an overheated pump unit. Vapor pressure within the pump casing can eject these parts with great force when they are disengaged. Allow the pump to completely cool before servicing it.

CAUTION

Pumps and related equipment must be installed and operated according to all national, local and industry standards.

INSTALLATION — SECTION B

Review all SAFETY information in Section A.

Since pump installations are seldom identical, this section offers only general recommendations and practices required to inspect, position, and arrange the pump and piping.

Most of the information pertains to a standard **static lift application** where the pump is positioned above the free level of liquid to be pumped.

If installed in a **flooded suction application** where the liquid is supplied to the pump under pressure, some of the information such as mounting, line configuration, and priming must be tailored to the specific application. Since the pressure supplied to the pump is critical to performance and safety, **be sure** to limit the incoming pressure to **50%** of the maximum permissible operating pressure as shown on the pump performance curve.

For further assistance, contact your Gorman-Rupp distributor or the Gorman-Rupp Company.

Pump Dimensions

Consult the pump Specification Data Sheet or consult the factory for the approximate physical dimensions of your pump.

PREINSTALLATION INSPECTION

The pump assembly was inspected and tested before shipment from the factory. Before installation, inspect the pump for damage which may have occurred during shipment. Check as follows:

a. Inspect the pump for cracks, dents, damaged threads, and other obvious damage.

b. Check for and tighten loose attaching hardware. Since gaskets tend to shrink after drying, check for loose hardware at mating surfaces.

c. Carefully read all warnings and cautions contained in this manual or affixed to the pump, and perform all duties indicated. Note the direction of rotation indicated on the pump. Check that the pump shaft rotates counterclockwise when facing the impeller.

CAUTION

Only operate this pump in the direction indicated by the arrow on the pump body and on the accompanying decal. Refer to **ROTATION** in **OPERATION**, Section C.

d. Check levels and lubricate as necessary. Refer to **LUBRICATION** in the **MAINTENANCE AND REPAIR** section of this manual and perform duties as instructed.

e. If the pump and power source have been stored for more than 12 months, some of the components or lubricants may have exceeded their maximum shelf life. These **must be inspected or replaced** to ensure maximum pump service.

If the maximum shelf life has been exceeded, or if anything appears to be abnormal, contact your Gorman-Rupp distributor or the factory to determine the repair or updating policy. **Do not** put the pump into service until appropriate action has been taken.

POSITIONING PUMP

Lifting

Pump unit weights will vary depending on the mounting and drive provided. Check the shipping tag on the unit packaging for the actual weight, and use lifting equipment with appropriate capacity. Drain the pump and remove all customer-installed equipment such as suction and discharge hoses or piping before attempting to lift existing, installed units.

WARNING!

Death or serious personal injury and damage to the pump or components

can occur if proper lifting procedures are not observed. Make certain that hoists, chains, slings or cables are in good working condition and of sufficient capacity and that they are positioned so that loads will be balanced and the pump or components will not be damaged when lifting. Suction and discharge hoses and piping must be removed from the pump before lifting. Lift the pump or component only as high as necessary and keep personnel away from suspended objects.

Mounting

Locate the pump in an accessible place as close as practical to the liquid being pumped. Level mounting is essential for proper operation.

The pump may have to be supported or shimmed to provide for level operation or to eliminate vibration.

Clearance

It is recommended that **18 inches (457 mm)** of clearance be provided in front of the back cover to permit removal of the cover and easy access to the pump interior. A **minimum** clearance of **10—1/2 inches (267 mm)** must be maintained to permit removal of the cover.

SUCTION AND DISCHARGE PIPING

Pump performance is adversely effected by increased suction lift, discharge elevation, and friction losses. See the performance curve and operating range shown on Page E-1 to be sure your overall application allows pump to operate within the safe operation range.

Materials

Either pipe or hose maybe used for suction and discharge lines; however, the materials must be compatible with the liquid being pumped. If hose is used in suction lines, it must be the rigid-wall, reinforced type to prevent collapse under suction. Using piping couplings in suction lines is not recommended.

Line Configuration

Keep suction and discharge lines as straight as possible to minimize friction losses. Make minimum use of elbows and fittings, which substantially increase friction loss. If elbows are necessary, use the long-radius type to minimize friction loss.

Connections to Pump

Before tightening a connecting flange, align it exactly with the pump port. Never pull a pipe line into place by tightening the flange bolts and/or couplings.

Lines near the pump must be independently supported to avoid strain on the pump which could cause excessive vibration, decreased bearing life, and increased shaft and seal wear. If hose-type lines are used, they should have adequate support to secure them when filled with liquid and under pressure.

Gauges

Most pumps are drilled and tapped for installing discharge pressure and vacuum suction gauges. If these gauges are desired for pumps that are not tapped, drill and tap the suction and discharge lines not less than 18 inches (457,2 mm) from the suction and discharge ports and install the lines. Installation closer to the pump may result in erratic readings.

SUCTION LINES

To avoid air pockets which could affect pump priming, the suction line must be as short and direct as possible. When operation involves a suction lift, the line must always slope upward to the pump from the source of the liquid being pumped; if the line slopes down to the pump at any point along the suction run, air pockets will be created.

Fittings

Suction lines should be the same size as the pump inlet. If reducers are used in suction lines, they

should be the eccentric type, and should be installed with the flat part of the reducers uppermost to avoid creating air pockets. Valves are not normally used in suction lines, but if a valve is used, install it with the stem horizontal to avoid air pockets.

Strainers

If a strainer is furnished with the pump, be certain to use it; any spherical solids which pass through a strainer furnished with the pump will also pass through the pump itself.

If a strainer is not furnished with the pump, but is installed by the pump user, make certain that the total area of the openings in the strainer is at least three or four times the cross section of the suction line, and that the openings will not permit passage of solids larger than the solids handling capability of the pump.

This pump is designed to handle up to 2—1/2 inch (63,5 mm) diameter spherical solids.

Sealing

Since even a slight leak will affect priming, head, and capacity, especially when operating with a high suction lift, all connections in the suction line should be sealed with pipe dope to ensure an airtight seal. Follow the sealant manufacturer's recommendations when selecting and applying the pipe dope. The pipe dope should be compatible with the liquid being pumped.

Suction Lines In Sumps

If a single suction line is installed in a sump, it should be positioned away from the wall of the sump at a distance equal to 1 1/2 times the diameter of the suction line.

If there is a liquid flow from an open pipe into the sump, the flow should be kept away from the suction inlet because the inflow will carry air down into the sump, and air entering the suction line will reduce pump efficiency.

If it is necessary to position inflow close to the suction inlet, install a baffle between the inflow and the suction inlet at a distance 1 1/2 times the diameter of the suction pipe. The baffle will allow entrained air to escape from the liquid before it is drawn into the suction inlet.

If two suction lines are installed in a single sump, the flow paths may interact, reducing the efficiency of one or both pumps. To avoid this, position the suction inlets so that they are separated by a distance equal to at least 3 times the diameter of the suction pipe.

Suction Line Positioning

The depth of submergence of the suction line is critical to efficient pump operation. Figure 1 shows recommended minimum submergence vs. velocity.

NOTE

The pipe submergence required may be reduced by installing a standard pipe increaser fitting at the end of the suction line. The larger opening size will reduce the inlet velocity. Calculate the required submergence using the following formula based on the increased opening size (area or diameter).

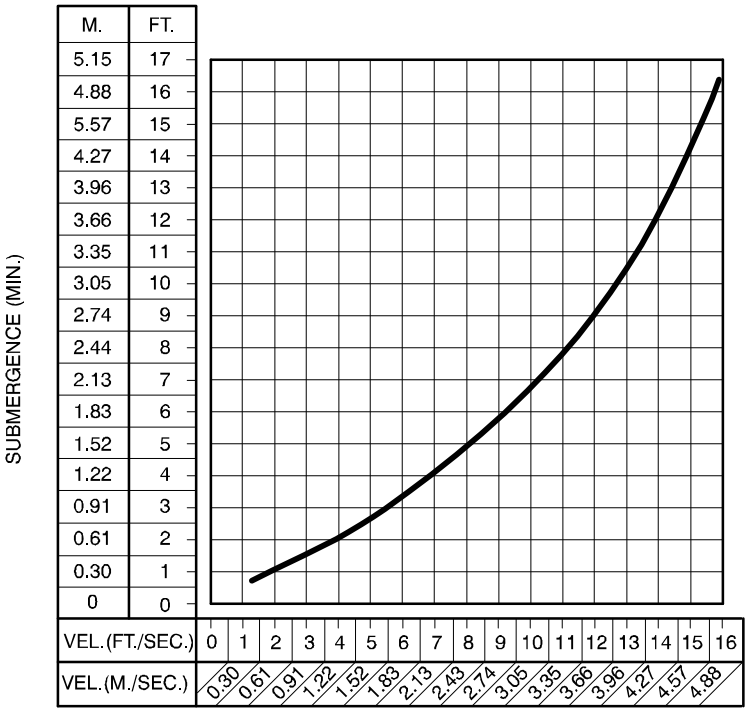

$$\text{VELOCITY (FT./SEC.)} = \frac{\text{FLOW (G.P.M.)} \times .321}{\text{AREA IN IN.}^2} \quad \text{OR} \quad \frac{\text{FLOW (G.P.M.)} \times .4085}{(\text{DIAMETER IN IN.})^2}$$

$$\text{VELOCITY (M./SEC.)} = \frac{\text{FLOW (L/SEC)} \times .001}{\text{AREA IN M}^2} \quad \text{OR} \quad \frac{\text{FLOW (M}^3\text{/HR} \times 353.7}{(\text{DIAMETER IN MM})^2}$$

Figure 1. Recommended Minimum Suction Line Submergence vs. Velocity

DISCHARGE LINES

Siphoning

Do not terminate the discharge line at a level lower than that of the liquid being pumped unless a siphon breaker is used in the line. Otherwise, a siphoning action causing damage to the pump could result.

Valves

CAUTION

If the application involves a high discharge head, the discharge throttling valve should close gradually before the pump is stopped.

Due to the high discharge head potential for Ultra V Series pumps, an electronically controlled or automatic slow-closing discharge throttling valve may be required. Consult the factory for additional information on high discharge head applications.

If a throttling valve is desired in the discharge line, use a valve as large as the largest pipe to minimize friction losses. Never install a throttling valve in a suction line.

With high discharge heads, it is recommended that a throttling valve and a system check valve be installed in the discharge line to protect the pump from excessive shock pressure and reverse rotation when it is stopped.

Bypass Lines

Self-priming pumps are not air compressors. During the priming cycle, air from the suction line must be vented to atmosphere on the discharge side. If the discharge line is open, this air will be vented through the discharge. However, if a check valve has been installed in the discharge line, the discharge side of the pump must be opened to atmospheric pressure through a bypass line installed between the pump discharge and the check valve. A self-priming centrifugal pump **will not prime** if there is sufficient static liquid head to hold the discharge check valve closed.

NOTE

The bypass line should be sized so that it does not

affect pump discharge capacity; however, the bypass line should be at least 1 inch in diameter to minimize the chance of plugging.

In **low discharge head applications** (less than 30 feet or 9 meters), it is recommended that the bypass line be run back to the wet well, and located 6 inches below the water level or cut-off point of the low level pump. In some installations, this bypass line may be terminated with a six-to-eight foot length of 1—1/4 inch I.D. **smooth-bore** hose; air and liquid vented during the priming process will then agitate the hose and break up any solids, grease, or other substances likely to cause clogging.

CAUTION

A bypass line that is returned to a wet well must be secured against being drawn into the pump suction inlet.

It is also recommended that pipe unions be installed at each 90° elbow in a bypass line to ease disassembly and maintenance.

In **high discharge head applications** (more than 30 feet), an excessive amount of liquid may be bypassed and forced back to the wet well under the full working pressure of the pump; this will reduce overall pumping efficiency. **Therefore, it is recommended that a Gorman-Rupp Automatic Air Release Valve be installed in the bypass line.**

Gorman-Rupp Automatic Air Release Valves are reliable, and require minimum maintenance. See **AUTOMATIC AIR RELEASE VALVE** in this section for information about Gorman-Rupp Automatic Air Release Valves. Consult your Gorman-Rupp distributor, or contact the Gorman-Rupp Company for selection of an Automatic Air Release Valve to fit your application.

If the installation involves a flooded suction such as a below-ground lift station, a pipe union and manual shut-off valve may be installed in the bleed line to allow service of the valve without shutting down the station, and to eliminate the possibility of flooding. If a manual shut-off valve is installed **anywhere** in the air release piping, it **must** be a full-opening **ball type** valve to prevent plugging by solids.

DANGER!

If a manual shut-off valve is installed in a bypass line, <u>it must not be left closed during operation</u>. A closed manual shut-off valve may cause a pump which has lost prime to continue to operate without reaching prime, causing dangerous overheating and possible explosive rupture of the pump casing. <u>Personnel could be severely injured.</u>

<u>Allow an over-heated pump to completely cool before servicing.</u> <u>Do not</u> remove plates, covers, gauges, or fittings from an over-heated pump. Liquid within the pump can reach boiling temperatures, and vapor pressure within the pump can cause parts being disengaged to be ejected with great force. <u>After the pump completely cools</u>, drain the liquid from the pump by removing the casing drain plug. Use caution when removing the plug to prevent injury to personnel from hot liquid.

AUTOMATIC AIR RELEASE VALVE

When properly installed, a Gorman-Rupp Automatic Air Release Valve will permit air to escape through the bypass line and then close automatically when the pump is fully primed and pumping at full capacity.

WARNING!

Some leakage (1 to 5 gallons [3.8 to 19 liters] per minute) will occur when the valve is fully closed. <u>Be sure</u> the bypass line is directed back to the wet well or tank to prevent hazardous spills.

Consult the manual accompanying the Air Release Valve for additional information on valve installation and performance.

Air Release Valve Installation

Staged pump applications generate much higher operating pressures within the pump casings than non-staged pump applications. This high pressure could cause a suction check valve to fail, resulting in loss of prime. Therefore, **any pump used in a staged application, whether in the lower or upper position, must have the suction check valve removed**. The lower stage of the VS Series pump is designed without a suction check valve, so removal of the check valve is not required.

In order to maintain the suction leg and facilitate initial priming (or re-priming if the suction leg is lost) without a suction check valve, it is recommended that staged pump applications be installed using two discharge check valves, with an automatic Air Release Valve installed between the two discharge check valves (see Figure 3). In this manner, when the liquid level in the sump activates the automatic liquid level device and starts the pumps, discharge pressure opens the first discharge check valve, allowing any entrained air in the system to escape through the Air Release Valve. When air in the system is purged, pressure opens the second discharge check valve for full operation.

When the liquid level in the sump lowers enough to de-activate the automatic liquid level device and stop the pumps, the first discharge check valve closes and creates an air-tight seal, thus maintaining liquid in the pump casing and suction line to allow the pump to re-prime when the liquid level in the sump rises and again activates the automatic liquid level device.

The second discharge check valve in the staged application acts as a “shock absorber” to prevent destructive “water hammer” when the pump shuts down.

The Automatic Air Release Valve must be independently mounted in a horizontal position between the discharge check valves. (see Figure 2). The inlet opening in the Air Release Valve is equipped with standard 1-inch NPT pipe threads.

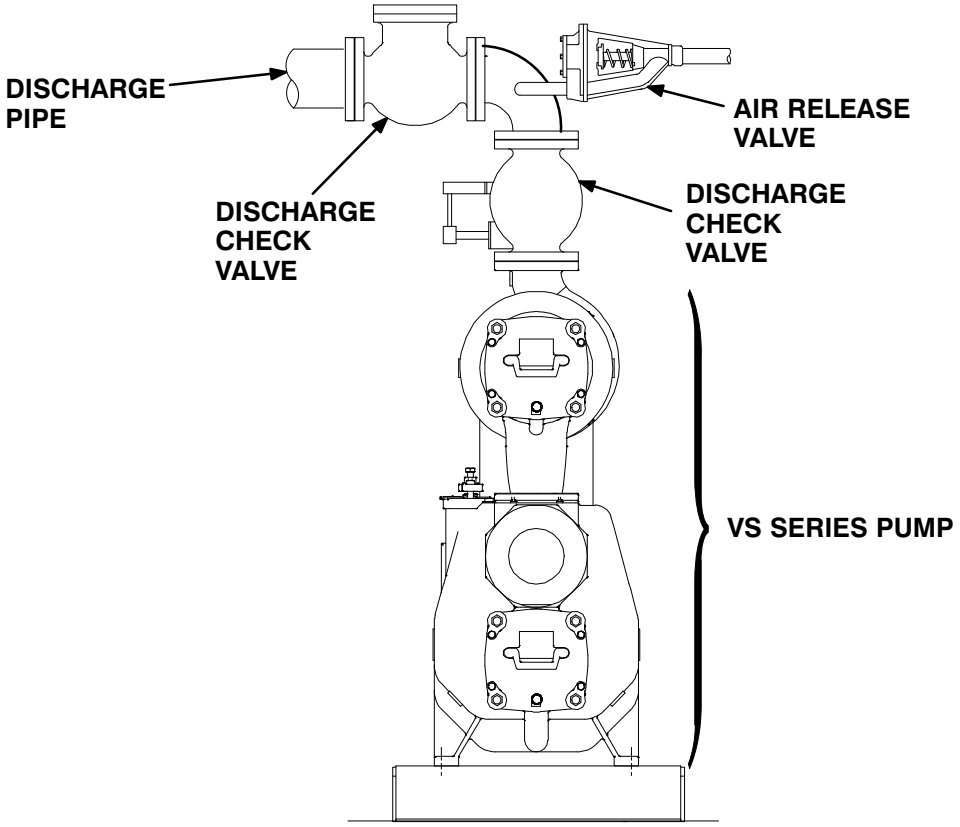

Figure 2. Typical Automatic Air Release Valve Installation

NOTE

*When installing the Air Release Valve on a **staged** pump application, position the Air Release Valve as close as possible to the primary discharge check valve. Six-inch and larger discharge check valves are available drilled and tapped to receive a stan-*

dard 1-inch NPT fitting, or the Air Release Valve may be installed in a spool flange between the two discharge check valves.

Connect the valve outlet to a bleed line which slopes back to the wet well or sump. The bleed line must be the same size as the outlet opening or larger, depending on which Air Release Valve is being used. If **piping** is used for the bleed line, avoid the use of elbows whenever possible.

NOTE

For multiple pump installations, it is recommended that each Air Release Valve be fitted with an independent bleeder line directed back to the wet well. If multiple Air Release Valves are installed in a system, ***do not*** *direct bleeder lines to a common manifold pipe. Contact your Gorman-Rupp distributor or the Gorman-Rupp Company for information about installation of an Automatic Air Release Valve for your specific application.*

DRIVE ARRANGEMENTS

Special consideration must be given to drive arrangements for staged pumping applications. Since pump installations are seldom identical, this section provides some general recommendations for selecting drive arrangements for staged pumps. Consult the factory for information regarding your specific application.

Dual Motor Drives

It is recommended that each pump be directly driven by its own electric motor, either through couplings (see Figure 3) or a belt arrangement (see Figure 4).

Each motor should be independently operated through a reduced voltage solid state (RVSS) starter, a variable frequency drive (VFD) or an adjustable speed drive (ASD). In this arrangement, the motor powering the lower stage pump should be programmed to start first and “ramp up” to full condition speed, then the second stage pump motor should start and “ramp up” to full condition speed. Pump motor shutdown should be programmed in reverse order, with the second stage pump motor “ramping down” before shutting off, then the first stage pump motor “ramping down” and shutting off. This “ramp up” and “ramp down” configuration helps reduce inrush current on startup and destructive “water hammer” on both startup and shut down.

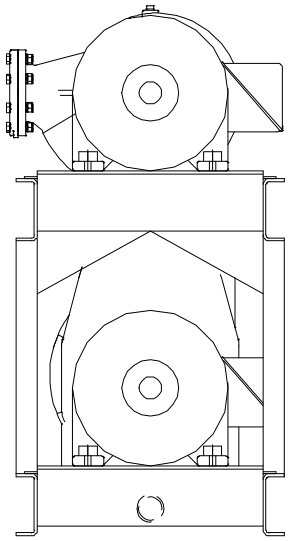

Figure 3. Recommended Dual Motor Direct Drive Arrangement

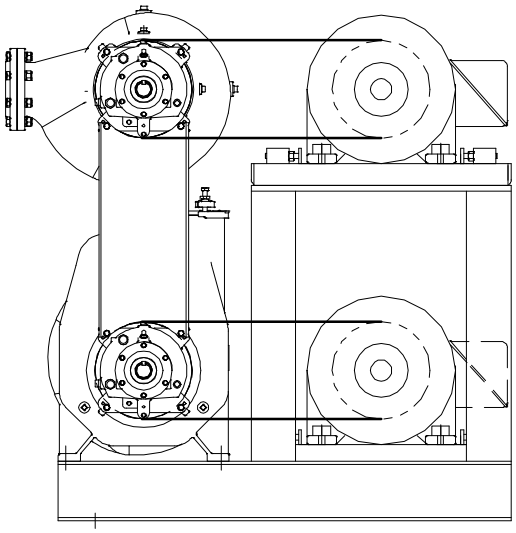

Figure 4. Recommended Dual Motor Belt Drive Arrangement

Single Motor Belt Drives

In staged applications where both pumps are belt driven by a single motor (either through a syncronous [cog] or V-belt configuration) certain arrangements must be used in order to ensure proper operation.

Figure 5 shows a recommended **alternate single motor belt drive arrangement** where the both pump shafts are driven by separate drive belts connected to one motor. In this arrangement, shaft and/or bearing loads are evenly divided between the two pumps.

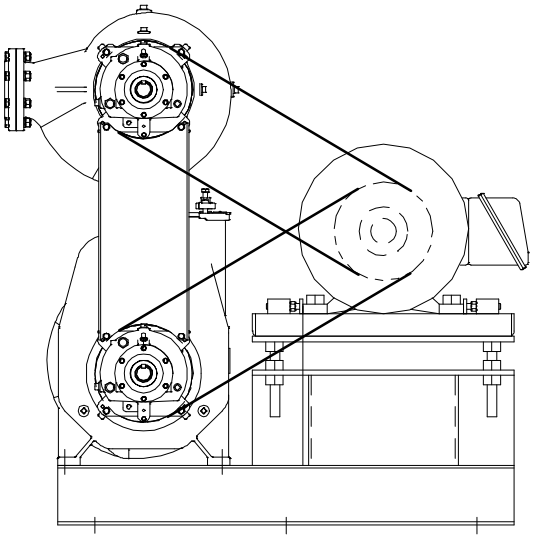

Figure 5. Alternate Single Motor Belt Drive Arrangement

Single Motor Combination Drives

In staged applications where both pumps are driven by a single motor in a combination belt and coupling drive configuration, certain arrangements must be used in order to ensure proper operation.

Figure 6 shows a recommended **alternate single motor combination drive arrangement**, where the first stage pump shaft is direct-coupled to the motor and the second stage pump shaft is driven by belts and an idler located between the two shafts. In this arrangement, shaft and/or bearing loads are shared between the two pumps.

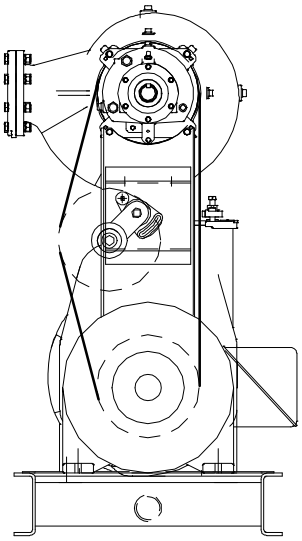

Figure 6. Alternate Single Motor Combination Drive Arrangement

Figures 7 and 8 show **single motor belt drive arrangements that are not recommended** because they can cause an overload condition on the shaft and/or bearings, resulting in premature failure.

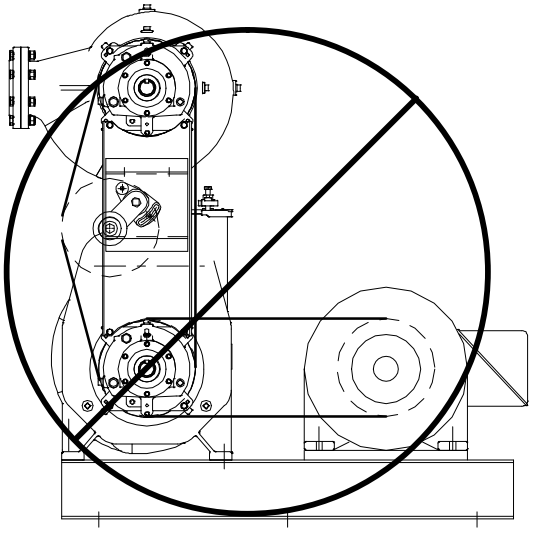

Figure 7. Improper Single Motor Belt Drive Arrangement (Dual Belts)

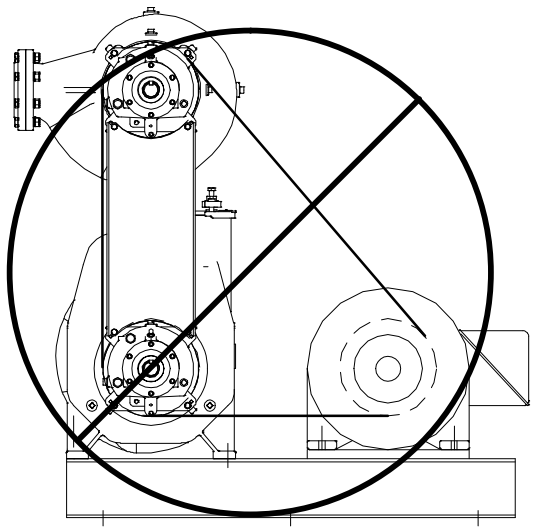

Figure 8. Improper Single Motor Belt Drive Arrangement (Single Belt Set)

HIGH PUMP TEMPERATURE SHUT-DOWN FOR DUAL-MOTOR DRIVE APPLICATIONS

NOTE

In dual-motor drive arrangements, the starters for both motors must be interlocked at the control panel to ensure that both motors shut down if overheating of either pump should occur.

In a dual-motor drive arrangement where each pump is directly driven by its own electric motor, it is recommended that each pump be equipped with a high temperature shutdown sensor and that these sensors be connected in parallel to the pump control panel(s) so that if either sensor is activated, both motors shut down (if powered independently).

It is also recommended that the pump control panel(s) be configured with an alarm system and **manual reset** for the high pump temperature shutdown circuit. In this manner, the cause of overheating must be investigated and corrected before the pumping system can be put back into service.

ALIGNMENT

The alignment of the pump and its power source is critical for trouble-free mechanical operation. In either a flexible coupling or belt-driven system, the driver and pump must be mounted so that their shafts are aligned with and parallel to each other. It is imperative that alignment be checked after the pump and piping are installed, and before operation.

NOTE

Check **Rotation***, Section C, before final alignment of the pump.*

When mounted at the Gorman-Rupp factory, driver and pump are aligned before shipment. Misalignment will occur in transit and handling. Pumps **must** be checked and realigned before operation. Before checking alignment, tighten the foundation bolts. The pump casing feet and/or pedestal feet, and the driver mounting bolts should also be tightly secured.

WARNING!

When checking alignment, disconnect the power source to ensure that the pump will remain inoperative.

CAUTION

Adjusting the alignment in one direction may alter the alignment in another direction. check each procedure after altering alignment.

Coupled Drives

When using couplings, the axis of the power source must be aligned to the axis of the pump shaft in both the horizontal and vertical planes. Most couplings require a specific gap or clearance between the driving and the driven shafts. Refer to the coupling manufacturer's service literature.

Align spider insert type couplings by using calipers to measure the dimensions on the circumference of the outer ends of the coupling hub every 90°. The coupling is in alignment when the hub ends are the same distance apart at all points (see Figure 9).

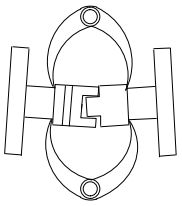

Figure 9. Aligning Spider-Type Couplings

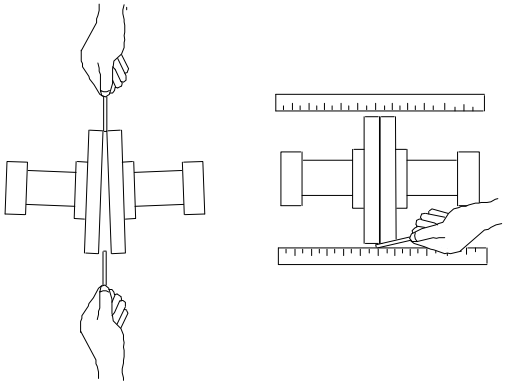

Figure 10. Aligning Non-Spider Type Couplings

Align non-spider type couplings by using a feeler gauge or taper gauge between the coupling halves every 90°. The coupling is in alignment when the hubs are the same distance apart at all points (see Figure 10).

Check parallel adjustment by laying a straightedge across both coupling rims at the top, bottom, and side. When the straightedge rests evenly on both halves of the coupling, the coupling is in horizontal parallel alignment. If the coupling is misaligned, use a feeler gauge between the coupling and the straightedge to measure the amount of misalignment.

Drive Belts

When using drive belts, the power source and the pump must be parallel. Use a straightedge along the sides of the pulleys to ensure that the pulleys are properly aligned (see Figure 11). In drive systems using two or more belts, make certain that the belts are a matched set; unmatched sets will cause accelerated belt wear.

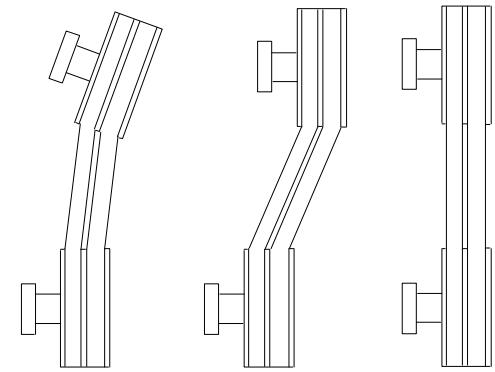

Figure 11. Alignment of V-Belt Driven Pumps

Tighten the belts in accordance with the belt manufacturer's instructions. If the belts are too loose, they will slip; if the belts are too tight, there will be excessive power loss and possible bearing failure. Select pulleys that will match the proper speed ratio; overspeeding the pump may damage both pump and power source.

DANGER!

Do not operate the pump without the guard in place over the rotating parts. exposed rotating parts can catch clothing, fingers, or tools, causing severe injury to personnel.

DRIVE BELT TENSIONING

General Rules of Tensioning

For new drive belts, check the tension after 5, 20 and 50 hours of operation and re-tension as required (see the following procedure for measuring belt tension). Thereafter, check and re-tension if required monthly or at 500 hour intervals, whichever comes first.

Ideal drive belt tension is the **lowest** tension at which the belt will not slip under peak load conditions. Do not over-tension drive belts. Over-tensioning will shorten both drive belt and bearing life. Under-tensioning will cause belt slippage. Always keep belts free from dirt, grease, oil and other foreign material which may cause slippage.

OPERATION — SECTION C

Review all SAFETY information in Section A.

Follow the instructions on all tags, labels and decals attached to the pump.

WARNING!

This pump is designed to handle liquids containing large entrained solids and slurries. Do not attempt to pump volatile, corrosive, or flammable liquids which may damage the pump or endanger personnel as a result of pump failure.

CAUTION

Pump speed and operating conditions must be within the performance range shown on pages E-1.

PRIMING

Install the pump and piping as described in **INSTALLATION**. Make sure that the piping connections are tight, and that the pump is securely mounted. Check that the pump is properly lubricated (see **LUBRICATION** in **MAINTENANCE AND REPAIR**).

This pump is self-priming, but the pump should never be operated unless there is liquid in the pump casing.

CAUTION

Never operate this pump unless there is liquid in the pump casing. The pump will not prime when dry. extended operation of a dry pump will destroy the seal assembly.

Add liquid to the pump casing when:

1. The pump is being put into service for the first time.
2. The pump has not been used for a considerable length of time.
3. The liquid in the pump casing has evaporated.

Once the pump casing has been filled, the pump will prime and reprime as necessary.

WARNING!

After filling the pump casing, reinstall and tighten the fill plug. Do not attempt to operate the pump unless all connecting piping is securely installed. Otherwise, liquid in the pump forced out under pressure could cause injury to personnel.

To fill the pump, remove the pump casing fill cover or fill plug in the top of the casing, and add clean liquid until the casing is filled. Replace the fill cover or fill plug before operating the pump.

STARTING

Consult the operations manual furnished with the power source.

Rotation

The correct direction of pump rotation is counterclockwise when facing the impeller. The pump could be damaged and performance adversely affected by incorrect rotation. If pump performance is not within the specified limits (see the curve on pages E-1), check the direction of power source rotation before further troubleshooting.

If an electric motor is used to drive the pump, remove drive belts, couplings, or otherwise disconnect the pump from the motor before checking motor rotation. Operate the motor independently while observing the direction of the motor shaft, or cooling fan.

If rotation is incorrect on a three-phase motor, have a qualified electrician interchange any two of the three phase wires to change direction. If rotation is incorrect on a single-phase motor, consult the literature supplied with the motor for specific instructions.

OPERATION

Lines With a Bypass

If a Gorman-Rupp Automatic Air Release Valve has been installed, the valve will automatically open to allow the pump to prime, and automatically close after priming is complete (see **INSTALLATION** for Air Release Valve operation).

If the bypass line is open, air from the suction line will be discharged through the bypass line back to the wet well during the priming cycle. Liquid will then continue to circulate through the bypass line while the pump is in operation.

Lines Without a Bypass

Open all valves in the discharge line and start the power source. Priming is indicated by a positive reading on the discharge pressure gauge or by a quieter operation. The pump may not prime immediately because the suction line must first fill with liquid. If the pump fails to prime within five minutes, stop it and check the suction line for leaks.

After the pump has been primed, partially close the discharge line throttling valve in order to fill the line slowly and guard against excessive shock pressure which could damage pipe ends, gaskets, sprinkler heads, and any other fixtures connected to the line. When the discharge line is completely filled, adjust the throttling valve to the required flow rate.

WARNING!

Do not operate the pump against a closed discharge throttling valve for long periods of time. If operated against a closed discharge throttling valve, pump components will deteriorate, and the liquid could come to a boil, build pressure, and cause the pump casing to rupture or explode.

Leakage

No leakage should be visible at pump mating surfaces, or at pump connections or fittings. Keep all line connections and fittings tight to maintain maximum pump efficiency.

Liquid Temperature And Overheating

The **maximum** liquid temperature for this pump is 160°F (71°C). Do not apply it at a higher operating temperature.

Overheating can occur if operated with the valves in the suction or discharge lines closed. Operating against closed valves could bring the liquid to a boil, build pressure, and cause the pump to rupture or explode. If overheating occurs, stop the pump and allow it to cool before servicing it. Refill the pump casing with cool liquid.

DANGER!

Allow an over-heated pump to completely cool before servicing. Do not remove plates, covers, gauges, or fittings from an over-heated pump. Liquid within the pump can reach boiling temperatures, and vapor pressure within the pump can cause parts being disengaged to be ejected with great force. After the pump completely cools, drain the liquid from the pump by removing the casing drain plug. Use caution when removing the plug to prevent injury to personnel from hot liquid.

As a safeguard against rupture or explosion due to heat, this pump is equipped with a pressure relief valve which will open if vapor pressure within the pump casing reaches a critical point. If overheating does occur, stop the pump immediately and allow it to cool before servicing it. **Approach any over-**

heated pump cautiously. It is recommended that the pressure relief valve assembly be replaced at each overhaul, or any time the pump casing overheats and activates the valve. **Never** replace this valve with a substitute which has not been specified or provided by the Gorman-Rupp Company.

Strainer Check

If a suction strainer has been shipped with the pump or installed by the user, check the strainer regularly, and clean it as necessary. The strainer should also be checked if pump flow rate begins to drop. If a vacuum suction gauge has been installed, monitor and record the readings regularly to detect strainer blockage.

Never introduce air or steam pressure into the pump casing or piping to remove a blockage. This could result in personal injury or damage to the equipment. If backflushing is absolutely necessary, liquid pressure **must** be limited to 50% of the maximum permissible operating pressure shown on the pump performance curve.

Pump Vacuum Check

With the pump inoperative, install a vacuum gauge in the system, using pipe dope on the threads. Block the suction line and start the pump. At operating speed the pump should pull a vacuum of 20 inches (508,0 mm) or more of mercury. If it does not, check for air leaks in the seal, gasket, or discharge valve.

Open the suction line, and read the vacuum gauge with the pump primed and at operation speed. Shut off the pump. The vacuum gauge reading will immediately drop proportionate to static suction lift, and should then stabilize. If the vacuum reading falls off rapidly after stabilization, an air leak exists. Before checking for the source of the leak, check the point of installation of the vacuum gauge.

STOPPING

Never halt the flow of liquid suddenly. If the liquid being pumped is stopped abruptly, damaging shock waves can be transmitted to the pump and piping system. Close all connecting valves slowly.

CAUTION

If the application involves a high discharge head, gradually close the discharge throttling valve before stopping the pump.

After stopping the pump, lock out or disconnect the power source to ensure that the pump will remain inoperative.

WARNING!

Do not operate the pump against a closed discharge throttling valve for long periods of time. If operated against a closed discharge throttling valve, pump components will deteriorate, and the liquid could come to a boil, build pressure, and cause the pump casing to rupture or explode.

Cold Weather Preservation

In below freezing conditions, drain the pump to prevent damage from freezing. Also, clean out any solids by flushing with a hose. Operate the pump for approximately one minute; this will remove any remaining liquid that could freeze the pump rotating parts. If the pump will be idle for more than a few hours, or if it has been pumping liquids containing a large amount of solids, drain the pump, and flush it thoroughly with clean water. To prevent large solids from clogging the drain port and preventing the pump from completely draining, insert a rod or stiff wire in the drain port, and agitate the liquid during the draining process. Clean out any remaining solids by flushing with a hose.

BEARING TEMPERATURE CHECK

Bearings normally run at higher than ambient temperatures because of heat generated by friction. Temperatures up to 160°F (71°C) are considered normal for bearings, and they can operate safely to at least 180°F (82°C).

Checking bearing temperatures by hand is inaccurate. Bearing temperatures can be measured accurately by placing a contact-type thermometer against the housing. Record this temperature for future reference.

A sudden increase in bearing temperature is a warning that the bearings are at the point of failing to operate properly. Make certain that the bearing lubricant is of the proper viscosity and at the correct level (see **LUBRICATION** in **MAINTENANCE AND REPAIR**). Bearing overheating can also be caused by shaft misalignment and/or excessive vibration.

When pumps are first started, the bearings may seem to run at temperatures above normal. Continued operation should bring the temperatures down to normal levels.

TROUBLESHOOTING — SECTION D

Review all SAFETY information in Section A.

WARNING!

Before attempting to open or service the pump:

1. **Familiarize yourself with this manual.**
2. **Lock out or disconnect the power source to ensure that the pump will remain inoperative.**
3. **Allow the pump to completely cool if overheated.**
4. **Check the temperature before opening any covers, plates, or plugs.**
5. **Close the suction and discharge valves.**
6. **Vent the pump slowly and cautiously.**
7. **Drain the pump.**

TROUBLE	POSSIBLE CAUSE	PROBABLE REMEDY
PUMP FAILS TO PRIME	Not enough liquid in casing.	Add liquid to casing. See **PRIMING**.
	Suction check valve contaminated or damaged.	Clean or replace check valve.
	Air leak in suction line.	Correct leak.
	Lining of suction hose collapsed.	Replace suction hose.
	Leaking or worn seal or pump gasket.	Check pump vacuum. Replace leaking or worn seal or gasket.
	Suction lift or discharge head too high.	Check piping installation and install bypass line if needed. See **INSTALLATION**.
	Strainer clogged.	Check strainer and clean if necessary.
PUMP STOPS OR FAILS TO DELIVER RATED FLOW OR PRESSURE	Air leak in suction line.	Correct leak.
	Lining of suction hose collapsed.	Replace suction hose.
	Leaking or worn seal or pump gasket.	Check pump vacuum. Replace leaking or worn seal or gasket.

TROUBLE	POSSIBLE CAUSE	PROBABLE REMEDY
PUMP STOPS OR FAILS TO DELIVER RATED FLOW OR PRESSURE	Strainer clogged.	Check strainer and clean if necessary.
	Suction intake not submerged at proper level or sump too small.	Check installation and correct submergence as needed.
	Impeller or other wearing parts worn or damaged.	Replace worn or damaged parts. Check that impeller is properly centered and rotates freely.
	Impeller clogged.	Free impeller of debris.
	Pump speed too slow.	Check driver output; check belts or couplings for slippage.
	Discharge head too high.	Install bypass line.
	Suction lift too high.	Measure lift w/vacuum gauge. Reduce lift and/or friction losses in suction line.
PUMP REQUIRES TOO MUCH POWER	Pump speed too high.	Check driver output; check that sheaves or couplings are correctly sized.
	Discharge head too low.	Adjust discharge valve.
	Liquid solution too thick.	Dilute if possible.
	Bearing(s) frozen.	Disassemble pump and check bearing(s).
PUMP CLOGS FREQUENTLY	Liquid solution too thick.	Dilute if possible.
	Discharge flow too slow.	Open discharge valve fully to increase flow rate, and run power source at maximum governed speed.
	Suction check valve or foot valve clogged or binding.	Clean valve.
EXCESSIVE NOISE	Cavitation in pump.	Reduce suction lift and/or friction losses in suction line. Record vacuum and pressure gauge readings and consult local representative or factory.
	Pumping entrained air.	Locate and eliminate source of air bubble.
	Pump or drive not securely mounted.	Secure mounting hardware.
	Impeller clogged or damaged.	Clean out debris; replace damaged parts.

PREVENTIVE MAINTENANCE

Routine preventive maintenance of the pump will maintain peak operating performance. Since pump applications are seldom identical, and pump wear is directly affected by such things as the abrasive qualities, pressure and temperature of the liquid being pumped, this section is intended only to provide general recommendations and practices for preventive maintenance. Regardless of the application however, following a routine preventive maintenance schedule will help assure trouble-free performance and long life from your Gorman-Rupp pump.

Record keeping is an essential component of a good preventive maintenance program. Changes in suction and discharge gauge readings (if so equipped) between regularly scheduled inspections can indicate problems that can be corrected before system damage or catastrophic failure occurs. The appearance of wearing parts should also be documented at each inspection for comparison as well. Also, if records indicate that a certain part (such as the seal) fails at approximately the same duty cycle, the part can be checked and replaced before failure occurs, reducing unscheduled down time.

For new applications, a first inspection of wearing parts at 250 hours will give insight into the wear rate for your particular application. Subsequent inspections should be performed at the intervals shown on the chart below. Critical applications should be inspected more frequently.

Preventive Maintenance Schedule

Item	Service Interval*				
	Daily	Weekly	Monthly	Semi-Annually	Annually
General Condition (Temperature, Unusual Noises or Vibrations, Cracks, Leaks, Loose Hardware, Etc.)	I				
Pump Performance (Gauges, Speed, Flow)	I				
Bearing Lubrication		I			R
Seal Lubrication (And Packing Adjustment, If So Equipped)		I			R
V-Belts (If So Equipped)			I		
Air Release Valve Plunger Rod (If So Equipped)			I	C	
Front Impeller Clearance (Wear Plate)				I	
Rear Impeller Clearance (Seal Plate)				I	
Check Valve					I
Pressure Relief Valve (If So Equipped)					C
Pump and Driver Alignment					I
Shaft Deflection					I
Bearings					I
Bearing Housing					I
Piping					I
Driver Lubrication — See Mfgr's Literature					

Legend:
I = Inspect, Clean, Adjust, Repair or Replace as Necessary
C = Clean
R = Replace

* Service interval based on an intermittent duty cycle equal to approximately 4000 hours annually. Adjust schedule as required for lower or higher duty cycles or extreme operating conditions.

PUMP MAINTENANCE AND REPAIR — SECTION E

MAINTENANCE AND REPAIR OF THE WEARING PARTS OF THE PUMP WILL MAINTAIN PEAK OPERATING PERFORMANCE.

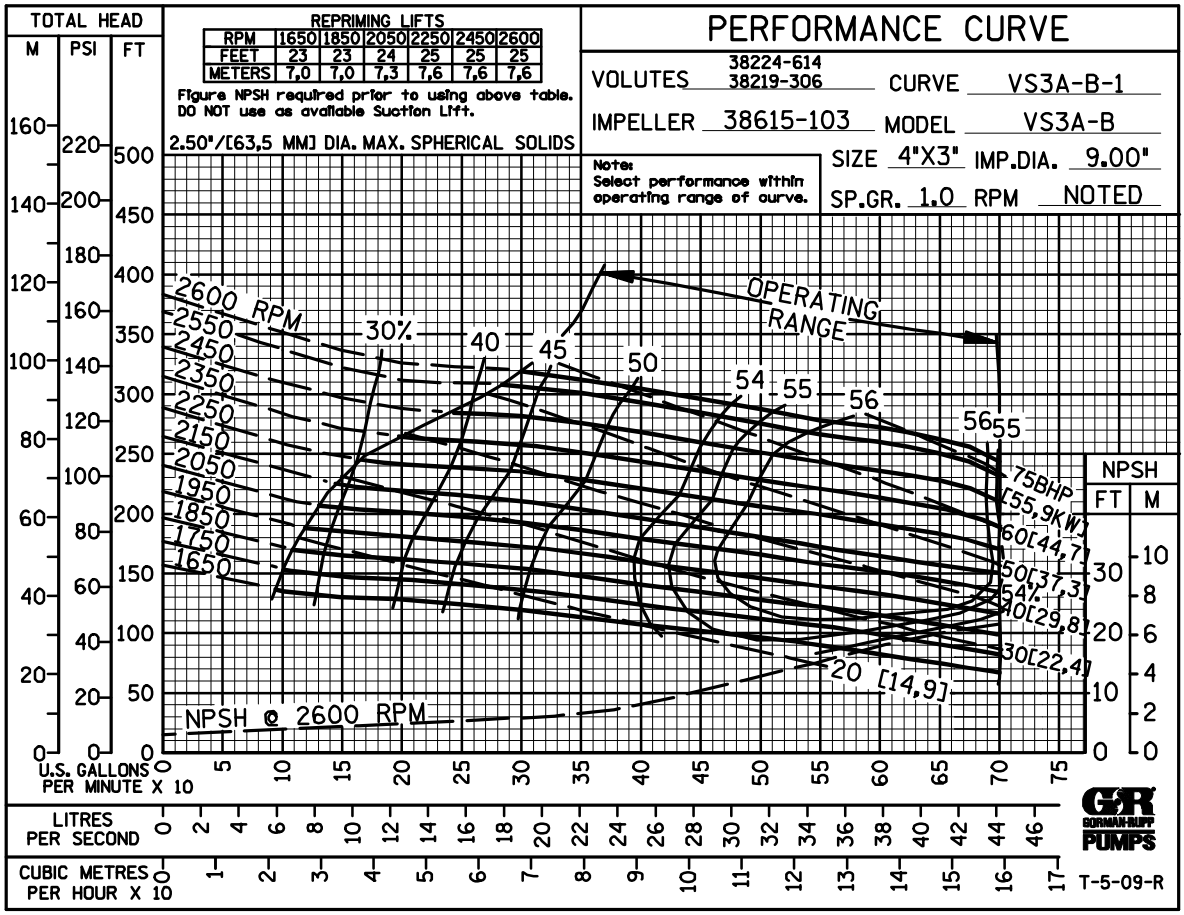

STANDARD PERFORMANCE FOR PUMP MODEL VS3A60-B, Including /WW

✳ Based on 70°F (21°C) clear water at sea level with minimum suction lift. Since pump installations are seldom identical, your performance may be different due to such factors as viscosity, specific gravity, elevation, temperature, and impeller trim.

If your pump serial number is followed by an “N”, your pump is **NOT** a standard production model. Contact the Gorman-Rupp Company to verify performance or part numbers.

CAUTION

Pump speed and operating condition points must be within the continuous performance range shown on the curves.

NOTE

The horsepower shown in the above curve is total combined horsepower for both the first and second stage of the VS Model.

ILLUSTRATION

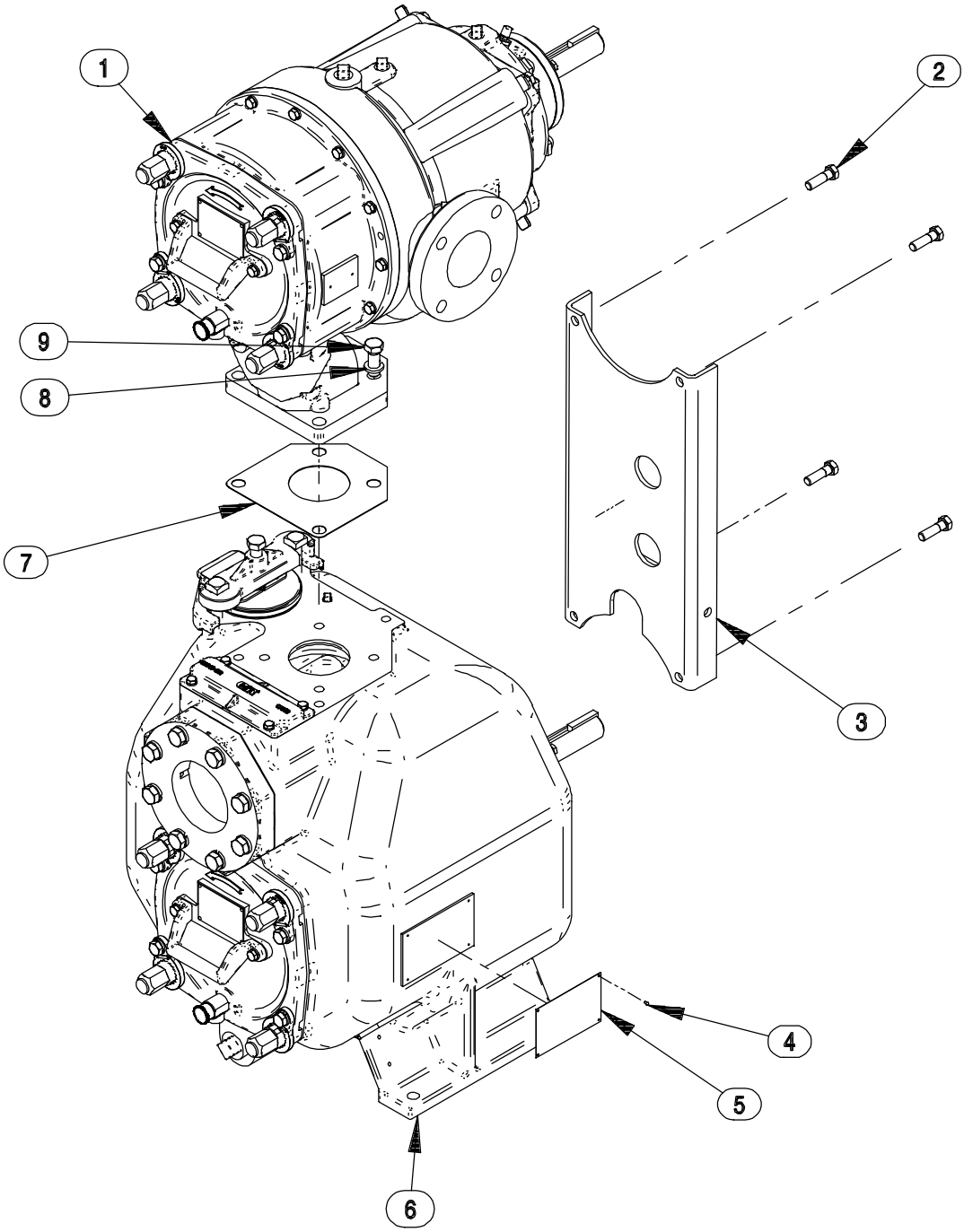

Figure 1. Pump Model VS3A60−B (Including /WW)

PARTS LIST
Pump Model VS3A60−B (Including /WW)
(From S/N 1368380 Up)

If your pump serial number is followed by an “N”, your pump is **NOT** a standard production model. Contact the Gorman-Rupp Company to verify part numbers.

ITEM NO.		PART NAME	PART NUMBER	QTY
1		ULTRA MATE PUMP ASSY	46146−065	1
2		HEX HD CAPSCREW	B0807 15991	4
3		SUPPORT BRACE	41881−875 24150	1
4		DRIVE SCREW	BM#04−03 17000	4
5		NAME PLATE	38819−002 13000	1
6		PUMP ASSEMBLY:		
		−VS3A60−B	46146−037	1
		−VS3A60−B /WW	46146−038	1
7	✳	DISCHARGE GASKET	38687−060	1
8		LOCK WASHER	J10 15991	4
9		HEX HD CAPSCREW	B1007 15991	4
NOT SHOWN:				
		LUBRICATION DECAL	38817−084	2
		G-R DECAL	GR−03	1
		“ULTRA V” DECAL	38816−342	1
		ROTATION DECAL	2613M	2
		INSTRUCTION TAG	38817−023	1
		WARNING DECAL	2613FE	2
		DISCHARGE STICKER	6588BJ	1
		PRIMING STICKER	6588AH	1
		SUCTION STICKER	6588AG	1
		INSTRUCTION TAG	38817−011	1
		SMART SCROLL DECAL	38816−251	1
OPTIONAL:				
		STAGED FLANGE KITS:		
		−4” X 3” NPT	48213−122	1
		−4” X 3” ASA SPOOL	48213−123	1
		−4” X 3” METRIC SPOOL	48213−124	1
		HI TEMP SHUT−DOWN KITS:		
		−145°F	48313−186	1
		−130°F	48313−256	1
		−120°F	48313−257	1
		HIGH TEMP SHUT-DOWN THERMOSTAT KIT 145°F	48313−172	1
		AIR RELEASE VALVES:		
		−10# COMP SPRING	GRP33−07A	1
		−25# COMP SPRING	GRP33−07	1
		−80# COMP SPRING	GRP33−07B	1

✳ INDICATES PARTS RECOMMENDED FOR STOCK

ILLUSTRATION

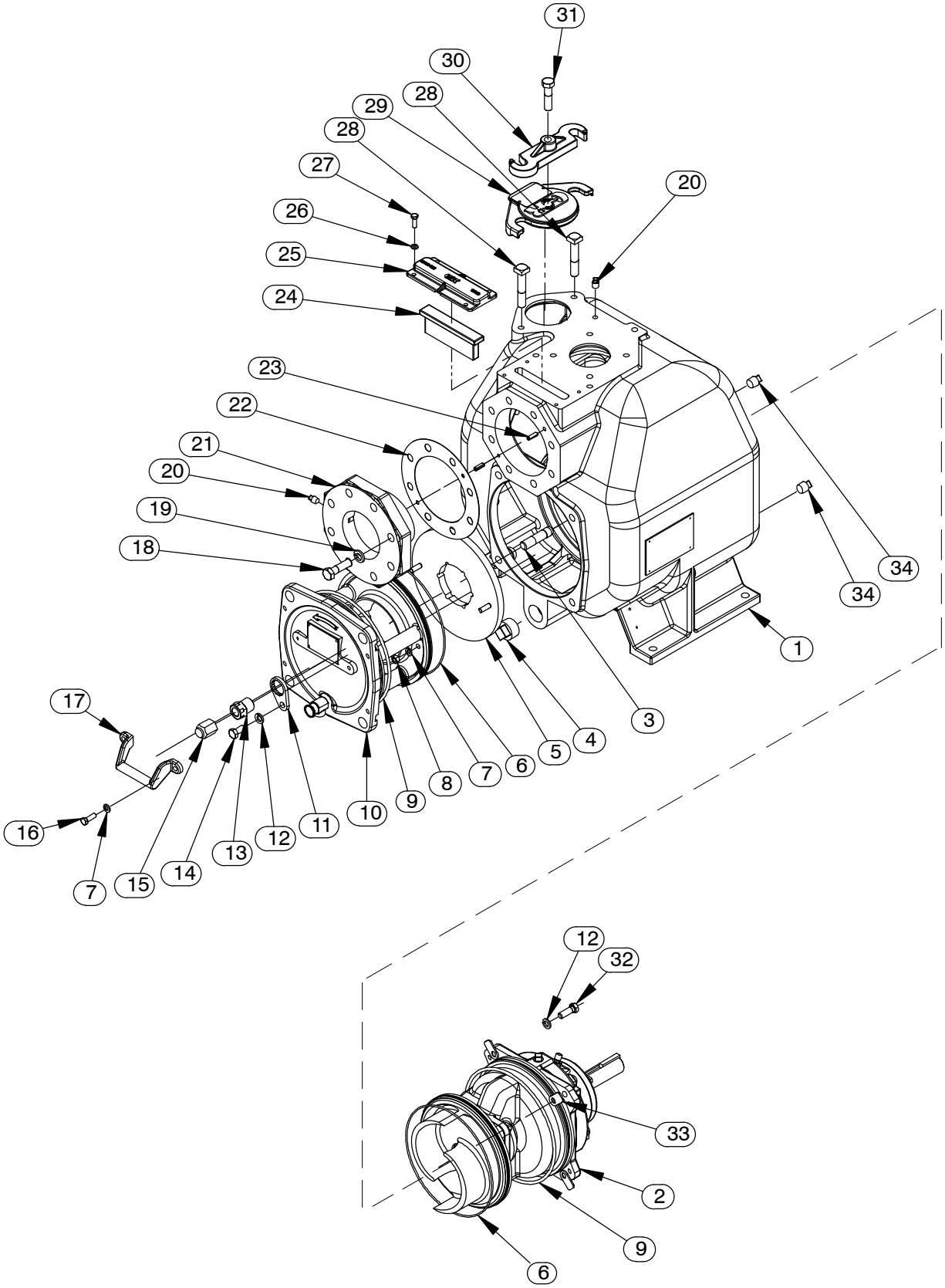

Figure 2. Pump Assemblies 46146—037 and 46146—038

PARTS LIST
Pump Assemblies 46146−037 and 46146−038

ITEM NO.	PART NAME	PART NUMBER	QTY
☞ 1	PUMP CASING	SEE NOTE BELOW	1
2	REPAIR ROTATING ASSY:		
	−VS3A60−B	44163−463	1
	−VS3A60−B /WW	44163−464	1
☞ 3	STUD	C1213 15991	4
☞ 4	PIPE PLUG	P20 10009	1
5 ✳	WEAR PLATE ASSY	46451−758 24150	1
6 ✳	O-RING	25152−273	2
7	LOCK WASHER	J06 15991	4
8	HEX NUT	D06 15991	2
9 ✳	O-RING	S1674	2
10	HI PRESS CPLATE ASSY	42111−831	1
	−WARNING PLATE	2613EV 13990	1
	−DRIVE SCREW	BM#04−03 17000	4
✳	−PRESS RELIEF VALVE	26662−007	1
	−WARNING DECAL	38816−302	1
11	LOCK COLLAR	38115−551 15001	4
12	LOCK WASHER	J08 15991	8
13	ADJUSTING SCREW	31871−070 1500G	4
14	HEX HEAD CAP SCREW	B0804 15991	4
15	BACK COVER NUT	31871−073 15000	4
16	HEX HEAD CAP SCREW	B0604−1/2 15991	2
17	HANDLE	12354 13010	1
18	HEX HEAD CAP SCREW		
	−VS3A60−B	B1009 15991	8
	STUD		
	−VS3A60−B /WW	C1015 15991	8
	HEX NUT		
	−VS3A60−B /WW	D10 15991	8
19	LOCK WASHER	J10 15991	8
☞20	PIPE PLUG	P04 15079	2
21	SUCTION FLANGE	38641−534 10000	1
22 ✳	GASKET	38683−502 19370	1
☞23	ROLL PIN	21154−229	2
24	CHECK VALVE PLUG 3”	38349−416 19020	1
25	FLAP VALVE COVER	38346−621 17040	1
26	LOCK WASHER	J05 15991	4
27	HEX HEAD CAP SCREW	B0504 15991	4
☞28	SQUARE HEAD BOLT	A1014 15991	2
29	FILL PORT COVER ASSY	42111−437	1
✳	FILL PORT GASKET	50G 19210	1
	WARNING PLATE	38816−097 13990	1
	DRIVE SCREW	BM#04−03 17000	2
30	CLAMP BAR	38111−004 11010	1
31	HEX HEAD CAP SCREW	B1010S 15991	1
32	HEX HEAD CAP SCREW	B0806 15991	4
33	SPACER	33221−022 17040	4
☞34	PIPE PLUG	P08 15079	2
NOT SHOWN:			
	SUCTION SPOOL PARTS (VS3A60−B /WW ONLY):		
	−SPOOL FLANGE	12066A 10010	1
	−FLANGE GASKET	25113−034	1
	−FLANGE PIPE PLUG	P20 10009	1
OPTIONAL:			
	DISASSEMBLY TOOL	48711−020	1
	FLANGE KITS:		
	3” NPT DISCH KIT	48213−119	1
	4” X 3” ASA SUCTION/DISCHARGE SPOOL KIT	48213−143	1
	4” ASA SUCTION SPOOL KIT	48213−142	1
	3” ASA DISCHARGE SPOOL KIT	48213−120	1
	4” X 3” METRIC SUCTION/DISCHARGE SPOOL KIT	48213−121	1
	4” METRIC SUCTION SPOOL KIT	48213−144	1
	3” METRIC DISCHARGE SPOOL KIT	48213−145	1
	G-R HARD IRON PARTS:		
	−WEAR PLATE ASSY	46451−758 24160	1
	SST PARTS:		
	−WEAR PLATE ASSY	46451−758 24170	1
	HI TEMP SHUT−DOWN KITS:		
	−145°F	48313−186	1
	−130°F	48313−256	1
	−120°F	48313−257	1
	HIGH TEMP SHUT-DOWN THERMOSTAT KIT 145°F	48313−172	1
	CASING HEATER ASSEMBLIES:		
	−120V	47811−103	1
	−230V	47811−104	1
	AIR RELEASE VALVES:		
	−10# COMP SPRING	GRP33−07A	1
	−25# COMP SPRING	GRP33−07	1
	−80# COMP SPRING	GRP33−07B	1

✳ INDICATES PARTS RECOMMENDED FOR STOCK

☞ INCLUDED WITH REPAIR PUMP CASING ASSY	46472−733	1

ILLUSTRATION

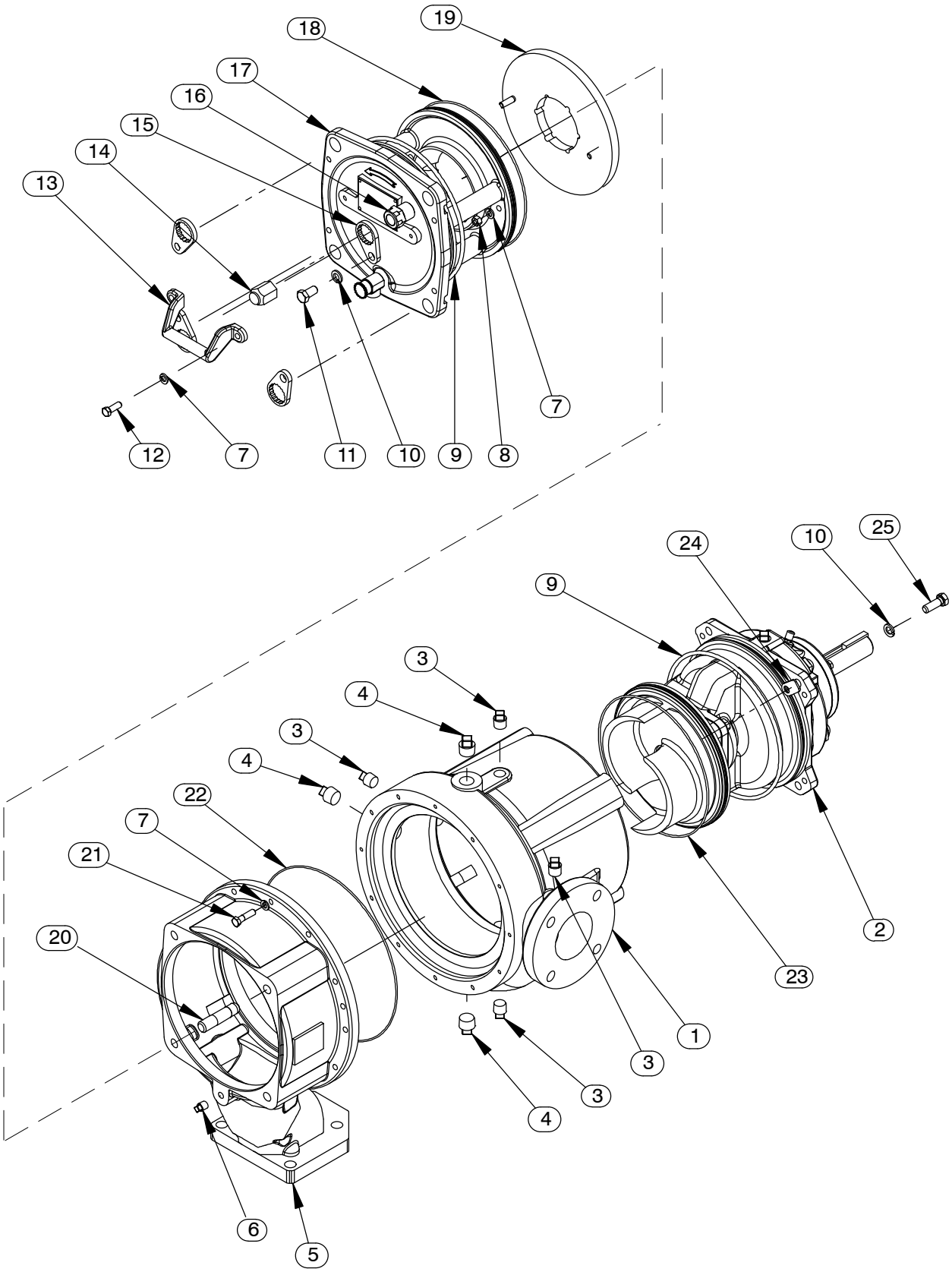

Figure 3. 46146−065 Ultra Mate Pump Assembly

PARTS LIST
46146–065 Ultra Mate Pump Assembly

If your pump serial number is followed by an “N”, your pump is **NOT** a standard production model. Contact the Gorman-Rupp Company to verify part numbers.

	ITEM NO.		PART NAME	PART NUMBER	QTY
☞	1		PUMP CASING	SEE NOTE BELOW	1
	2		REPAIR ROTATING ASSY:		
			–VS3A60–B	44163–463	1
			–VS3A60–B /WW	44163–464	1
☞	3		PIPE PLUG	P08 15079	4
☞	4		PIPE PLUG	P12 15079	3
	5		TRANSITION CHAMBER	38644–811 11010	1
	6		PIPE PLUG	P04 15079	1
☞	7		LOCK WASHER	J06 15991	15
	8		HEX NUT	D06 15991	2
	9	✳	O-RING	S1674	2
☞	10		LOCK WASHER	J08 15991	8
	11		HEX HEAD CAP SCREW	B0804 15991	4
☞	12		HEX HEAD CAP SCREW	B0604–1/2 15991	2
	13		HANDLE	12354 13010	1
	14		BACK COVER NUT	31871–073 15000	4
	15		LOCK COLLAR	38115–551 15001	4
	16		ADJUSTING SCREW	31871–070 1500G	4
	17		HIGH PRESS CPLATE ASSY	42111–831	1
			–WARNING PLATE	2613EV 13990	1
			–DRIVE SCREW	BM#04–03 17000	4
		✳	–PRESS RELIEF VALVE	26662–007	1
			–WARNING DECAL	38816–302	1
	18	✳	O-RING	25152–273	1
	19		WEAR PLATE ASSEMBLY	46451–758 24150	1
	20		STUD	C1213 15991	4
	21		HEX HEAD CAP SCREW	B0606 15991	11
	22	✳	O-RING	25152–277	1
	23	✳	O-RING	25152–273	1
	24		SPACER	33221–022 17040	4
☞	25		HEX HEAD CAP SCREW	B0806 15991	4
OPTIONAL:					
			DISASSEMBLY TOOL	48711–020	1
			G-R HARD IRON PARTS:		
			–WEAR PLATE ASSY	46451–758 24160	1
			SST PARTS:		
			–WEAR PLATE ASSY	46451–758 24170	1
			HI TEMP SHUT–DOWN KITS:		
			–145°F	48313–186	1
			–130°F	48313–256	1
			–120°F	48313–257	1
			HIGH TEMP SHUT-DOWN THERMOSTAT KIT 145°F	48313–172	1
			AIR RELEASE VALVES:		
			–10# COMP SPRING	GRP33–07A	1
			–25# COMP SPRING	GRP33–07	1
			–80# COMP SPRING	GRP33–07B	1
☞			INCLUDED W/REPAIR PUMP CASING ASSY	46474–360	1

✳ INDICATES PARTS RECOMMENDED FOR STOCK

ILLUSTRATION

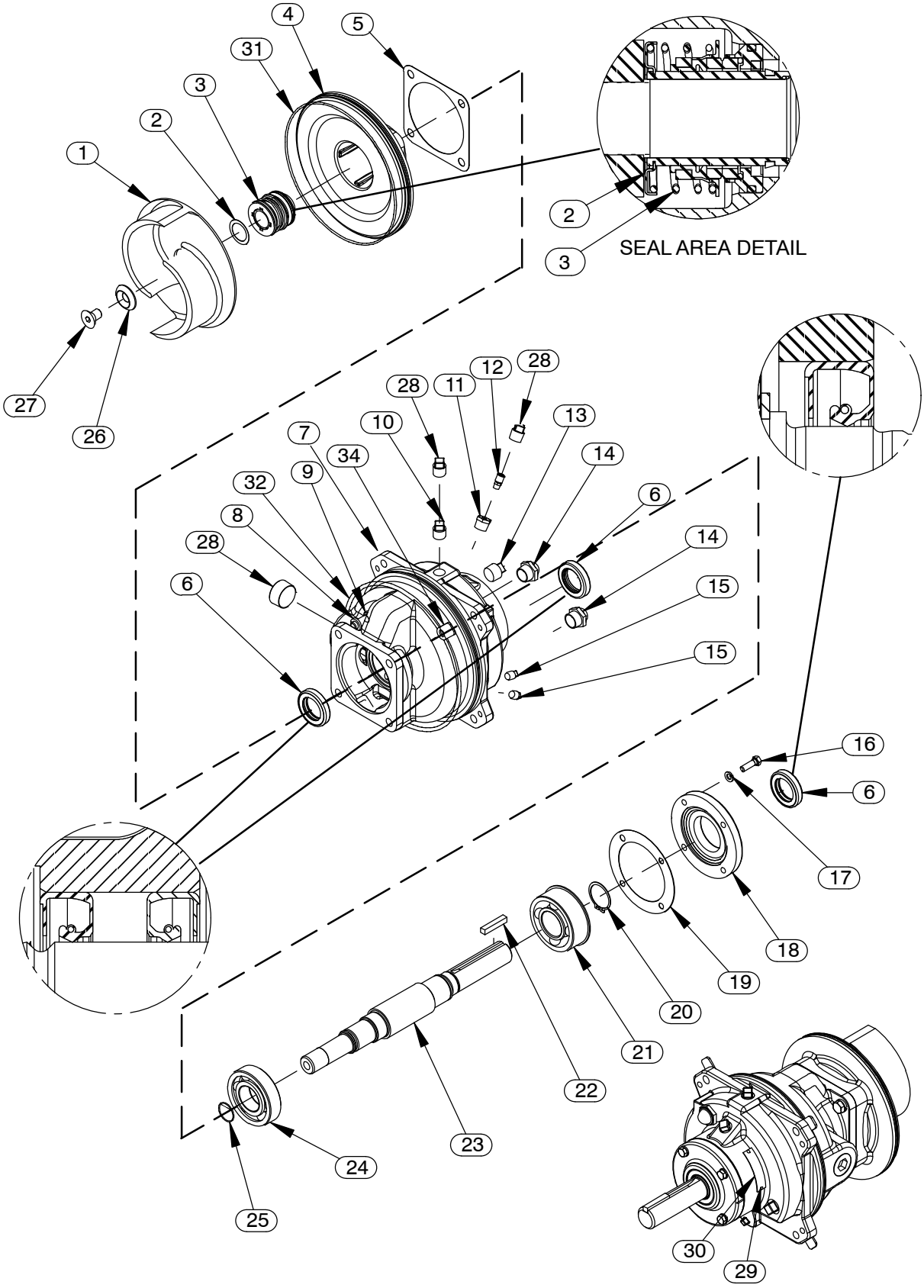

Figure 4. Repair Rotating Assemblies

PARTS LIST
Repair Rotating Assemblies

Note: Order the complete Repair Rotating Assembly from the Pump Model Assembly Parts Lists on pages E−2 or E−3. Rotating Assemblies for /WW models also include all standard parts listed below.

ITEM NO.		PART NAME	PART NUMBER	QTY
1	✳	IMPELLER	38615−103 11010	1
2	✳	ADJ. SHIM SET	37J 17090	REF
3	✳	SEAL ASSY	46513−151	1
4		SEAL PLATE	38272−267 10000	1
5	✳	GASKET	10959G 20000	1
6	✳	OIL SEAL	S1352	3
7		BEARING HOUSING	38251−411 10000	1
8		LOCK WASHER	J08 15991	4
9		HEX HEAD CAP SCREW	B0805−1/2 15991	4
10		VENTED PIPE PLUG	4823A 15079	1
11		REDUCER PIPE BUSHING	AP0802 15079	1
12		AIR VENT	S1530	1
13		PIPE PLUG	P12 15079	1
14		SIGHT GAUGE	S1471	2
15		PIPE PLUG	P04 15079	2
16		HEX HEAD CAP SCREW	B0605 15991	4
17		LOCK WASHER	J06 15991	4
18		BEARING CAP	38322−220 10000	1
19	✳	GASKET	38683−271 18000	1
20		RETAINING RING	S442	1
21	✳	BALL BEARING	S375	1
22	✳	SHAFT KEY	N0608 15990	1
23	✳	IMPELLER SHAFT	38514−827 16000	1
24	✳	BALL BEARING	S1088	1
25	✳	O-RING	25154−022	REF
26	✳	IMPELLER WASHER	31167−029 16000	1
27	✳	IMPELLER SCREW	F1004S 1500G	1
28		PIPE PLUG	PC20 10009	1
29		DRIVE SCREW	BM#04−03 17000	2
30		ASSEMBLY PLATE	2613GG 13990	1
31	✳	O-RING	25152−273	1
32	✳	O-RING	S1674	1
33		SHIPPING PLUG	11495B 15079	2
34		SPACER	33221−022 17040	4
NOT SHOWN:				
		ROTATION DECAL	2613M	1
		INSTRUCTION TAG	6588U	1
OPTIONAL:				
		G-R HARD IRON PARTS:		
		−IMPELLER	38615−103	1
		−SEAL PLATE	38272−267	1
		SST PARTS:		
		−IMPELLER	38615−103 17070	1
		−SEAL PLATE	38272−267 17070	1
		−IMPELLER SHAFT	38514−827	1
		−CART SEAL ASSY	46513−156	1

✳ INDICATES PARTS RECOMMENDED FOR STOCK

PUMP AND SEAL DISASSEMBLY AND REASSEMBLY

Review all SAFETY information in Section A.

Follow the instructions on all tags, label and decals attached to the pump.

This pump requires little service due to its rugged, minimum-maintenance design. However, if it becomes necessary to inspect or replace the wearing parts, follow these instructions which are keyed to the illustrations (see Figures through 4) and the accompanying parts lists.

WARNING!

This manual will alert personnel to known procedures which require special attention, to those which could damage equipment, and to those which could be dangerous to personnel. However, this manual cannot possibly anticipate and provide detailed instructions and precautions for every situation that might occur during maintenance of the unit. Therefore, it is the responsibility of the owner/maintenance personnel to ensure that only safe, established maintenance procedures are used, and that any procedures not addressed in this manual are performed only after establishing that neither personal safety nor pump integrity are compromised by such practices.

Many service functions may be performed by draining the pump and removing the back cover assembly. If major repair is required, the piping and/or power source must be disconnected. The following instructions assume complete disassembly is required.

Before attempting to service the pump, disconnect or lock out the power source and take precautions to ensure that it will remain inoperative. Close all valves in the suction and discharge lines.

For power source disassembly and repair, consult the literature supplied with the power source, or contact your local power source representative.

WARNING!

Before attempting to open or service the pump:

1. **Familiarize yourself with this manual.**
2. **Disconnect or lock out the power source to ensure that the pump will remain inoperative.**
3. **Allow the pump to completely cool if overheated.**
4. **Check the temperature before opening any covers, plates, or plugs.**
5. **Close the suction and discharge valves.**
6. **Vent the pump slowly and cautiously.**
7. **Drain the pump.**

WARNING!

Death or serious personal injury and damage to the pump or components can occur if proper lifting procedures are not observed. Make certain that hoists, chains, slings or cables are in good working condition and of sufficient capacity and that they are positioned so that loads will be balanced and the pump or components will not be damaged when lifting. Suction and discharge hoses and piping must be removed from the pump before lifting. Lift the pump or component only as high as necessary and keep personnel away from suspended objects.

CAUTION

Use **Only Genuine Gorman—Rupp** replacement parts. Failure to do so may create a hazard and damage the pump or diminish optimal pump performance. Any such hazard, damage or diminished performance is not covered by the warranty.

NOTE

When appropriate recycling facilities are available, the user should recycle components and fluids when doing any routine maintenance / repairs and also at the end of the pump's useful life. All other components and fluids shall be disposed of according to all applicable codes and regulations.

WARNING!

Do not install a suction check valve in the first stage of the VS Series pump model. Installing a suction check valve in the first stage of the VS Series pump model can cause over-pressurization of the first stage pump casing, resulting in possible explosion of the pump and serious injury or death to personnel.

NOTE

The back cover and rotating assemblies are identical for both the first stage pump and the Ultra Mate second stage, therefore the service instructions are the same. Because of these similarities, most of the following instructions reference the first stage pump model drawing (Figure 2). Instructions specific to the Ultra Mate second stage will reference Figures 1 and/or 3 and will denote "Ultra Mate Second Stage Only".

Support Plate Removal

(Figure 1)

Disassembly of the either the first or second stage pump model requires removal of the support plate (3). Disengage the hardware (2) and remove the plate.

Back Cover And Wear Plate Removal

(Figure 2)

The wear plate (5) is easily accessible and may be serviced by removing the back cover assembly (10). Before attempting to service the pump, remove the pump casing drain plug (4) and drain the pump. Clean and reinstall the drain plug.

Remove the back cover nuts (15) and pry the back cover and assembled wear plate from the pump casing (1).

NOTE

An alternate method of removing the back cover from the pump casing is to remove the back cover nuts (15) and two diagonally opposing locking collars (11). Install two 1/2—13 UNC x 2 inch long screws in the tapped holes in the back cover and use them to press the back cover out of the pump casing.

Inspect the wear plate, and replace it if badly scored or worn. To remove the wear plate, disengage the hardware (7 and 8).

Inspect the back cover O-rings (6 and 9) and replace it if damaged or worn.

Rotating Assembly Removal

(Figure 4)

The rotating assembly may be serviced without disconnecting the suction or discharge piping; however, the power source must be removed to provide clearance.

The impeller (1) should be loosened while the rotating assembly is still secured to the pump casing. Before loosening the impeller, remove the seal cavity drain plug and drain the seal lubricant. This will prevent the oil in the seal cavity from escaping when the impeller is loosened. Clean and reinstall the seal cavity drain plug.

Immobilize the impeller by wedging a block wood between the vanes and the pump casing. Remove the impeller capscrew and washer (26 and 27).

If removed, install the shaft key (22). Install a lathe dog on the drive end of the shaft (23) with the “V” notch positioned over the shaft key.

With the impeller rotation still blocked, see Figure 5 and use a long piece of heavy bar stock to pry against the arm of the lathe dog in a counterclockwise direction (when facing the drive end of the shaft). **Use caution** not to damage the shaft or keyway. When the impeller breaks loose, remove the lathe dog, key and wood block.

NOTE

Do not remove the impeller until the rotating assembly has been removed from the pump casing.

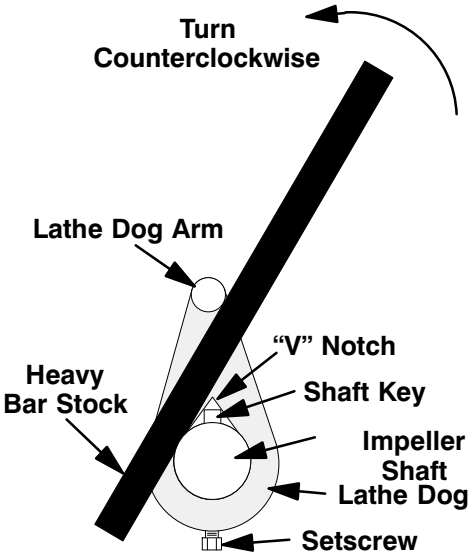

Figure 5. Loosening Impeller

(Figure 2)

Disengage the hardware (12 and 32) securing the rotating assembly to the pump casing and remove the spacers (33). Separate the rotating assembly by pulling straight away from the pump casing.

NOTE

An optional disassembly tool is available from the factory. If the tool is used, follow the instructions packed with it. A similar tool may be assembled using 1/2-inch pipe (schedule 80 steel or malleable iron) and a standard tee (see Figure 6). All threads are 1/2-inch NPT. ***Do not pre-assemble the tool.***

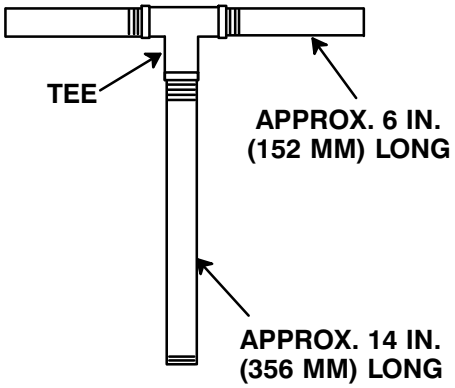

Figure 6. Rotating Assembly Tool

To install the tool, remove the vented plug (10, Figure 4) from the bearing housing, and screw the longest length of pipe into the vent hole until fully engaged. Install the tee, and screw the handles into the tee. Use caution when lifting the rotating assembly to avoid injury to personnel or damage to the assembly

Remove the O-rings (6 and 9).

Impeller Removal

(Figure 4)

With the rotating assembly removed from the pump casing, unscrew the impeller from the shaft. Use caution when unscrewing the impeller; tension on the shaft seal spring will be released as the impeller is removed. Inspect the impeller and replace if cracked or badly worn.

Remove the impeller adjusting shims (2); tie and tag the shims, or measure and record their thickness for ease of reassembly.

Seal Removal

(Figure 4)

Slide the shaft sleeve and rotating portion of the seal off the shaft as a unit.

Use a pair of stiff wires with hooked ends to remove the stationary element and seat.

An alternate method of removing the stationary seal components is to remove the hardware (8 and 9) and separate the seal plate (4) and gasket (5)

from the bearing housing (7). Position the seal plate on a flat surface with the impeller side down. Use a wooden dowel or other suitable tool to press on the back side of the stationary seat until the seat, O-rings, and stationary element can be removed.

Remove the shaft sleeve O-ring (25).

If no further disassembly is required, refer to **Seal Installation**.

Shaft and Bearing Removal and Disassembly

(Figure 4)

When the pump is properly operated and maintained, the bearing housing should not require disassembly. Disassemble the shaft and bearings **only** when there is evidence of wear or damage.

CAUTION

Shaft and bearing disassembly in the field is not recommended. These operations should be performed only in a properly-equipped shop by qualified personnel.

Remove the bearing housing drain plug and drain the lubricant. Clean and reinstall the drain plug.

Disengage the hardware (16 and 17) and slide the bearing cap (18) and oil seal (6) off the shaft. Remove the bearing cap gasket (19) and press the oil seal from the bearing cap.

Place a block of wood against the impeller end of the shaft (23) and tap the shaft and assembled bearings (21 and 24) from the bearing housing.

Pry or press the oil seals (6) from the bearing housing.

After removing the shaft and bearings, clean and inspect the bearings **in place** as follows.

CAUTION

To prevent damage during removal from the shaft, it is recommended that bearings be cleaned and inspected **in place**. It is **strongly** recommended that the bearings be replaced **any** time the shaft and bearings are removed.

Clean the bearing housing, shaft and all component parts (except the bearings) with a soft cloth soaked in cleaning solvent. Inspect the parts for wear or damage and replace as necessary.

WARNING!

Most cleaning solvents are toxic and flammable. Use them only in a well ventilated area free from excessive heat, sparks, and flame. Read and follow all precautions printed on solvent containers.

Clean the bearings thoroughly in **fresh** cleaning solvent. Dry the bearings with filtered compressed air and coat with light oil.

CAUTION

Bearings must be kept free of all dirt and foreign material. Failure to do so will greatly shorten bearing life. **Do not** spin dry bearings. This may scratch the balls or races and cause premature bearing failure.

Rotate the bearings by hand to check for roughness or binding and inspect the bearing balls. If rotation is rough or the bearing balls are discolored, replace the bearings.

The bearing tolerances provide a tight press fit onto the shaft and a snug slip fit into the bearing housing. Replace the bearings, shaft, or bearing housing if the proper bearing fit is not achieved.

If bearing replacement is required, remove the outboard bearing retaining ring (20). Use a bearing puller to remove the bearings from the shaft.

Pump Casing and Transition Chamber Removal (Ultra Mate Second Stage Model Only)

(Figure 3)

The removal method for the Ultra Mate pump casing (1) depends on the configuration of the casing discharge port. If the discharge port is in a vertical position, install two eye hooks in opposing holes in the discharge flange. Use a suitable sling and hoist to remove the casing.

If the discharge port is in a horizontal position, fabricate a lifting device as shown in Figure 7 and screw it into the hole for the pipe plug (4). **Make certain** that the threaded end of the tool fully engages the threads in the casing. Use a suitable sling and hoist to remove the casing.

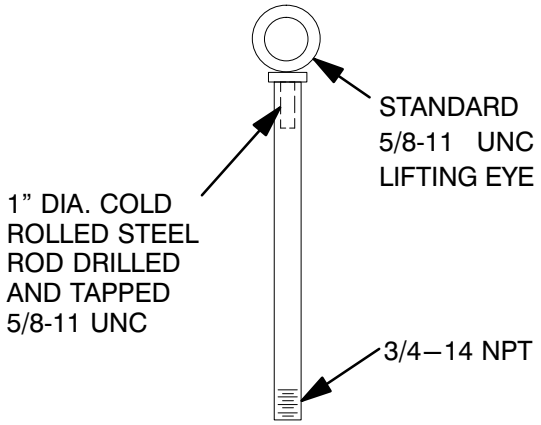

Figure 7. Casing Removal Tool

WARNING!

Do not attempt to lift the complete pump unit using the lifting device. It is designed to facilitate removal or installation of individual components only. Additional weight may result in damage to the pump or failure of the lifting device.

Remove the hardware (7 and 21) securing the pump casing to the transition chamber. Separate the pump casing and O-ring (22) from the transition chamber.

If the transition chamber requires removal from the Ultra V first stage pump, support the chamber using a suitable hoist and sling. See Figure 1 and remove the mounting hardware (8 and 9). Use the hoist and sling to remove the transition chamber. Remove the gasket (7).

Pump Casing and Transition Chamber Installation (Ultra Mate Second Stage Model Only)

(Figure 1)

Apply ‘Permatex Aviation No. 3 Form-A-Gasket’ to the mating surfaces and install a new gasket (7). Using the hoist and sling, position the transition chamber on top of the first stage pump casing. Secure the transition chamber with the hardware (8 and 9). Remove the sling from the transition chamber.

(Figure 3)

Lubricate a new O-ring (22) with a generous amount of grease and install it over the shoulder on the transition chamber (5). Using the same lifting method as used for disassembly, position the pump casing (1) over the transition chamber shoulder and secure it with the previously removed hardware (7 and 21). Remove the sling and, if used, the lifting device from the pump casing and reinstall the pipe plug (4).

Shaft and Bearing Reassembly and Installation

(Figure 4)

Clean the bearing housing, shaft and all component parts (except the bearings) with a soft cloth soaked in cleaning solvent. Inspect the parts for wear or damage as necessary.

WARNING!

Most cleaning solvents are toxic and flammable. Use them only in a well ventilated area free from excessive heat, sparks, and flame. Read and follow all precautions printed on solvent containers.

Inspect the shaft for distortion, nicks or scratches, or for thread damage on the impeller end. Dress small nicks and burrs with a fine file or emery cloth. Replace the shaft if defective.

Position the inboard oil seal (6) in the bearing housing bore with the lip positioned as shown in Figure 4. Press the oil seal into the housing until the face is **just flush** with the counterbored surface toward the inside of the housing.

CAUTION

To prevent damage during removal from the shaft, it is recommended that bearings be cleaned and inspected **in place**. It is **strongly** recommended that the bearings be replaced **any** time the shaft and bearings are removed.

NOTE

Position the outboard bearing (21) on the shaft with the integral retaining ring on the bearing O.D. toward the drive end of the shaft.

The bearings may be heated to ease installation. An induction heater, hot oil bath, electric oven, or hot plate may be used to heat the bearings. Bearings should **never** be heated with a direct flame or directly on a hot plate.

NOTE

*If a hot oil bath is used to heat the bearings, both the oil and the container must be **absolutely** clean. If the oil has been previously used, it must be **thoroughly** filtered.*

Heat the bearings to a uniform temperature **no higher than** 250°F (120°C), and slide the bearings onto the shaft, one at a time, until they are fully seated. This should be done quickly, in one continuous motion, to prevent the bearings from cooling and sticking on the shaft.

After the bearings have been installed and allowed to cool, check to ensure that they have not moved away from the shaft shoulders in shrinking. If movement has occurred, use a suitably sized sleeve and a press to reposition the bearings against the shaft shoulders.

If heating the bearings is not practical, use a suitably sized sleeve, and an arbor (or hydraulic) press to install the bearings on the shaft.

CAUTION

When installing the bearings onto the shaft, **never** press or hit against the outer race, balls, or ball cage. Press **only** on the inner race.

Secure the outboard bearing (21) to the shaft with the snap ring (20).

It is recommended that a sleeve be positioned against the inboard oil seal (6) to prevent the lip of the oil seal from rolling as the shaft and bearing are installed in the bearing housing. The O.D. of the sleeve should be just smaller than the bearing housing bore, while the I.D. of the sleeve should be just larger than the O.D. of the lip seal area of the shaft.

With the lip seal sleeve in place, lubricate the lip seal area of the shaft, and slide the shaft and assembled bearings into the bearing housing until the retaining ring on the outboard bearing seats against the bearing housing. Remove the lip seal sleeve.

CAUTION

When installing the shaft and bearings into the bearing bore, push against the outer race. **Never** hit the balls or ball cage.

Position the outboard oil seal (6) in the bearing housing bore with the lip positioned as shown in Figure 4. Press the oil seal into the housing until the face is **just flush** with the machined surface on the housing.

Press the oil seal (6) into the bearing cap (18) with the lip positioned as shown in Figure 2. Replace the bearing cap gasket (19) and secure the bearing cap with the hardware (16 and 17). **Be careful** not to damage the oil seal lip on the shaft keyway.

Lubricate the bearing housing as indicated in **LUBRICATION**.

Seal Installation

(Figures 4 and 8)

WARNING!

Most cleaning solvents are toxic and flammable. Use them only in a well ventilated area free from excessive heat, sparks, and flame. Read and follow all precautions printed on solvent containers.

Clean the seal cavity and shaft with a cloth soaked in fresh cleaning solvent. Inspect the stationary seat bore in the seal plate for dirt, nicks and burrs, and remove any that exist. The stationary seat bore **must** be completely clean before installing the seal.

CAUTION

A new seal assembly should be installed **any time** the old seal is removed from the pump. Wear patterns on the finished faces cannot be realigned during reassembly. Reusing an old seal could result in premature failure.

The seal is not normally reused because wear patterns on the finished faces cannot be realigned during reassembly. This could result in premature failure. If necessary to reuse an old seal in an emergency, **carefully** wash all metallic parts in fresh cleaning solvent and allow to dry thoroughly.

Inspect the seal components for wear, scoring, grooves, and other damage that might cause leakage. If any components are worn, replace the complete seal; **never mix old and new seal parts**.

If a replacement seal is being used, remove it from the container and inspect the precision finished faces to ensure that they are free of any foreign matter.

To ease installation of the seal, lubricate the shaft sleeve, shaft sleeve O-ring and the external stationary seat O-ring with a very **small** amount of light lubricating oil. See Figure 8 for seal part identification.

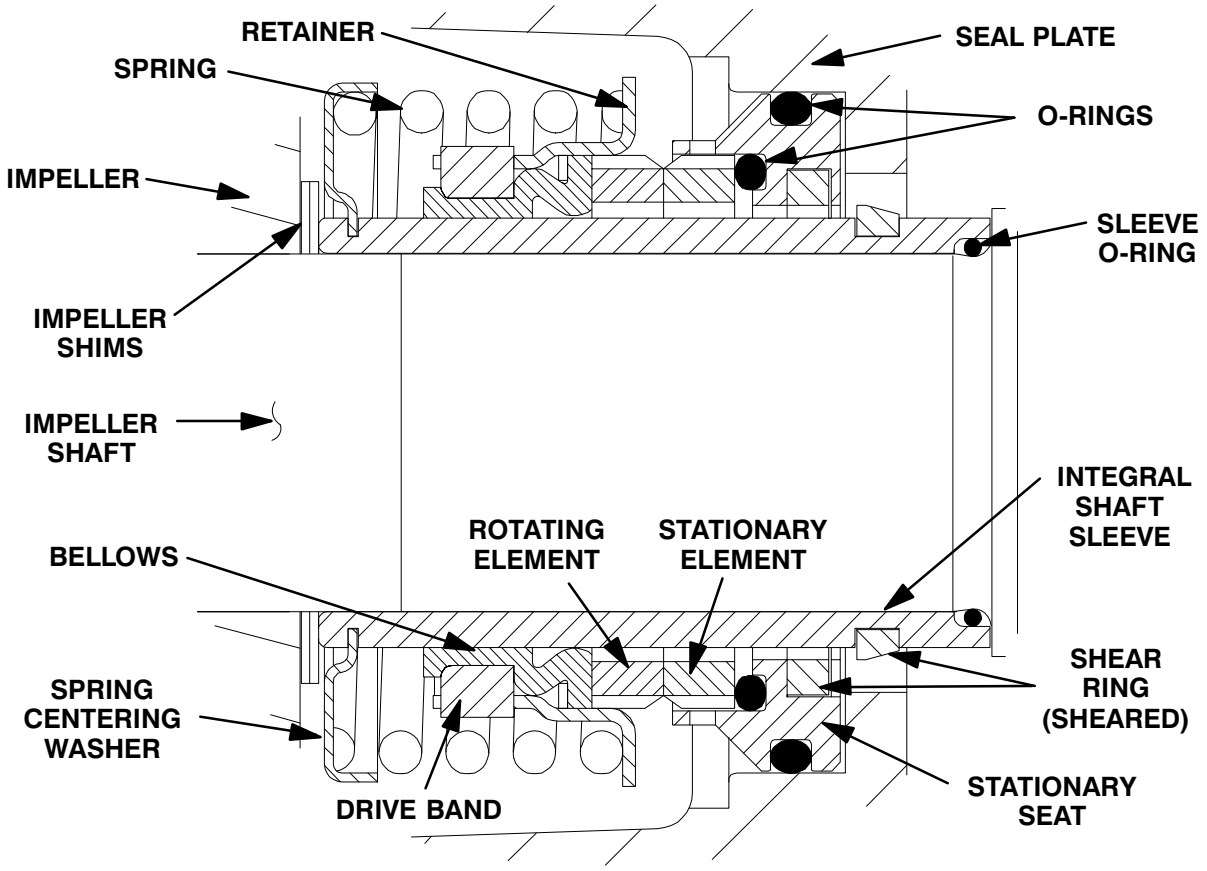

Figure 8. Cartridge Seal Assembly

CAUTION

This seal is not designed for operation at temperatures above 160°F (71°C). Do not use at higher operating temperatures.

If the seal plate (4) was removed, install the seal plate gasket (5). Position the seal plate over the shaft and secure it to the bearing housing with the hardware (8 and 9).

To prevent damaging the shaft sleeve O-ring (25) on the shaft threads, stretch the O-ring over a piece of plastic tubing that the I.D. is a little larger than the O.D. of the shaft. Slide the tube over the shaft threads, then slide the O-ring off the tube and onto the shaft. Remove the tube, and continue to slide the O-ring down the shaft until it seats against the shaft shoulder.

When installing a new cartridge seal assembly, remove the seal from the container, and remove the mylar storage tabs, if so equipped, from between the seal faces.

CAUTION

Some cartridge seal assemblies are equipped with mylar storage tabs between the seal faces. These storage tabs **must** be removed before installing the seal.

Lubricate the external stationary seat O-ring with light oil. Slide the seal assembly onto the shaft until the external stationary seat O-ring engages the bore in the seal plate.

Clean and inspect the impeller as described in **Impeller Installation and Adjustment**. Install the full set of impeller shims (2) provided with the seal, and screw the impeller onto the shaft until it is seated against the seal (see Figure 9).

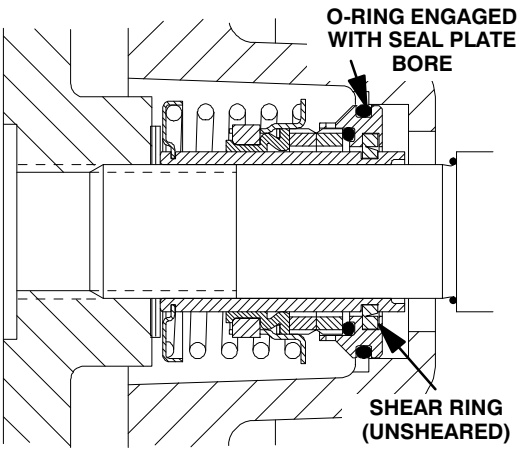

Figure 9. Seal Partially Installed

Continue to screw the impeller onto the shaft. This will press the stationary seat into the seal plate bore.

NOTE

A firm resistance will be felt as the impeller presses the stationary seat into the seal plate bore.

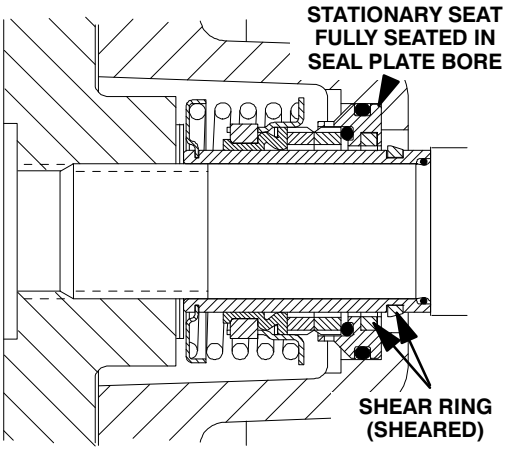

Figure 10. Seal Fully Installed

As the stationary seat becomes fully seated, the seal spring compresses, and the shaft sleeve will break the nylon shear ring. This allows the sleeve to slide down the shaft until seated against the shaft shoulder. Continue to screw the impeller onto the shaft until the impeller, shims, and sleeve are fully seated against the shaft shoulder (see Figure 10).

Measure the impeller-to-seal plate clearance, and remove impeller adjusting shims to obtain the proper clearance as described in **Impeller Installation and Adjustment**.

If necessary to reuse an old seal in an emergency, carefully separate the rotating and stationary seal faces from the bellows retainer and stationary seat.

CAUTION

A new seal assembly should be installed **any time** the old seal is removed from the pump. Wear patterns on the finished faces cannot be realigned during reassembly. Reusing an old seal could result in premature failure.

Handle the seal parts with extreme care to prevent damage. Be careful not to contaminate precision finished faces; even fingerprints on the faces can shorten seal life. If necessary, clean the faces with a non-oil based solvent and a clean, lint-free tissue. Wipe **lightly** in a concentric pattern to avoid scratching the faces.

Carefully wash all metallic parts in fresh cleaning solvent and allow to dry thoroughly.

CAUTION

Do not attempt to separate the rotating portion of the seal from the shaft sleeve when reusing an old seal. The rubber bellows will adhere to the sleeve during use, and attempting to separate them could damage the bellows.

Inspect the seal components for wear, scoring, grooves, and other damage that might cause leakage. Inspect the integral shaft sleeve for nicks or

cuts on either end. If any components are worn, or the sleeve is damaged, replace the complete seal; **never mix old and new seal parts**.

Install the stationary seal element in the stationary seat. Press this stationary subassembly into the seal plate bore until it seats squarely against the bore shoulder. A push tube made from a piece of plastic pipe would aid this installation. The I.D. of the pipe should be slightly larger than the O.D. of the shaft sleeve.

Slide the rotating portion of the seal (consisting of the integral shaft sleeve, spring centering washer, spring, bellows and retainer, and rotating element) onto the shaft until the seal faces contact.

Proceed with **Impeller Installation and Adjustment**.

Impeller Installation And Adjustment

(Figure 4)

Inspect the impeller, and replace it if cracked or badly worn. Inspect the impeller and shaft threads for dirt or damage, and clean or dress the threads as required.

CAUTION

The shaft and impeller threads **must** be completely clean before reinstalling the impeller. Even the slightest amount of dirt on the threads can cause the impeller to seize to the shaft, making future removal difficult or impossible without damage to the impeller or shaft.

Install the same thickness of impeller adjusting shims (2) as previously removed. Apply 'Never-Seez' or equivalent to the shaft threads and screw the impeller onto the shaft until tight.

NOTE

At the slightest sign of binding, immediately back the impeller off, and check the threads for dirt. ***Do not*** *try to force the impeller onto the shaft*.

A clearance of .025 to .040 inch (0,64 to 1,02 mm) between the impeller and the seal plate is recommended for maximum pump efficiency. Measure this clearance, and add or remove impeller adjusting shims as required.

Proceed with ***Rotating Assembly Installation*** *before installing the impeller capscrew and washer (26 and 27). The rotating assembly must be installed in the pump casing in order to torque the impeller capscrew.*

After the rotating assembly is installed in the pump casing, coat the threads of the impeller capscrew (27) with 'Never-Seez' or equivalent compound, and install the impeller washer (26) and capscrew; torque the capscrew to 90 ft. lbs. (1080 in. lbs. or 12,4 m. kg.).

Rotating Assembly Installation

(Figure 2)

NOTE

There is a 1-1/2 inch diameter socket head pipe plug located in the side of the bearing housing. This hole is required for manufacturing purposes only; therefore the pipe plug should never require removal.

Install the O-rings (6 and 9) and lubricate them with light grease. Ease the rotating assembly into the pump casing using the installation tool. **Be careful** not to damage the O-ring.

Install the rotating assembly adjusting spacers (33) and secure the rotating assembly to the pump casing with the hardware (12 and 32).

To set the impeller and wear plate clearance, refer to the **Back Cover Installation And Adjustment**.

Back Cover Installation And Adjustment

(Figures 2 and 11)

If the wear plate (5) was removed for replacement, carefully center it on the back cover and secure it with the hardware (7 and 8). The wear plate **must** be concentric to prevent binding when the back cover is installed.

Clearance between the impeller and wear plate is adjusted using four adjusting screws and locking collars. There are 18 detents on the I.D. of each locking collar (11). Indexing the collars one detent on the adjusting screws represents approximately

.005 inch (0,13 mm) of wear plate clearance. The recommended clearance between the wear plate and the impeller is .010 to .020 inch (0,25 to 0,50 mm).

Replace the back cover O-rings (6 and 9) and lubricate them with a generous amount of No. 2 grease. Clean any scale or debris from the contacting surfaces in the pump casing that might interfere or prevent a good seal with the back cover.

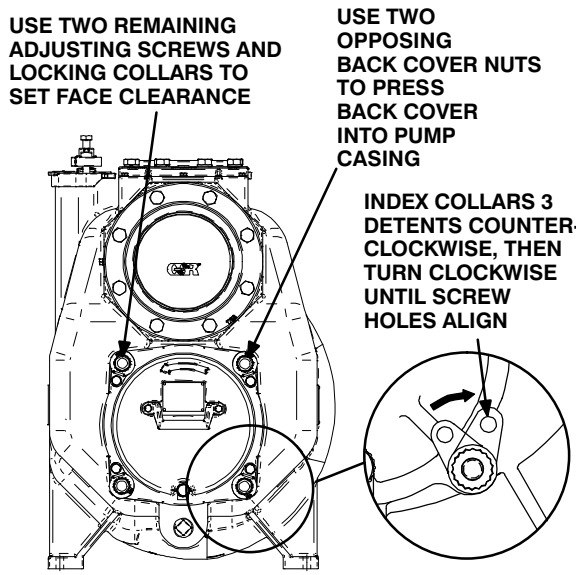

Figure 11. Installing and Adjusting Back Cover

Screw the four adjusting screws (13) into the tapped holes in the back cover plate until they are **just flush** with the machined surface on the back side of the cover plate.

Align the back cover plate over the studs (3) and slide it into the pump casing. Use two back cover nuts (15) on diagonally opposing studs to press the back cover into the pump casing until the wear plate **just touches** the impeller when the shaft is turned by hand. **Tighten the back cover nuts evenly to avoid binding.**

With the wear plate just touching the impeller, turn the two free adjusting screws until they engage the pump casing. Position the locking collars over the adjusting screws so the holes in the collars for the locking screws align approximately with the holes in the cover plate.

Loosen the back cover nuts used to press the back cover into the pump casing one full turn.

Pull the collars off the adjusting screws, index them three detents counterclockwise, and reinstall the collars on the adjusting screws. Use the collars to turn the adjusting screws clockwise until the holes in the locking collars realign with the tapped screw holes in the back cover plate. Secure the locking collars to the back cover plate with the hardware (12 and 14). Install the two remaining back cover nuts snugly against the adjusting screws.

Remove the first two back cover nuts from their studs. Turn the adjusting screws clockwise until they engage the pump casing. Install the locking collars and hardware (12 and 14). Reinstall the back cover nuts.

Be sure the wear plate does not scrape against the impeller.

Over time it may be necessary to repeat the adjustment process to compensate for normal wear between the impeller and wear plate. When all of the adjustment has been used on the back cover side of the pump, an additional 0.125 inch (3,2 mm) of adjustment may be obtained by removing the rotating assembly spacers (33).

Allow an installed pump to completely cool before draining liquid from the pump casing. Remove the back cover. Remove the rotating assembly adjusting shims, then reinstall the hardware securing the rotating assembly to the pump casing. Perform the back cover adjustment procedure described above to obtain the proper face clearance.

PRESSURE RELIEF VALVE MAINTENANCE

(Figure 2)

The back cover is equipped with a pressure relief valve to provide additional safety for the pump and operator (refer to **Liquid Temperature And Overheating** in **OPERATION**).

It is recommended that the pressure relief valve assembly be replaced at each overhaul, or any time the pump overheats and activates the valve. **Never** replace this valve with a substitute which has not been specified or provided by the Gorman-Rupp Company.

Periodically, the valve should be removed for inspection and cleaning. When reinstalling the relief valve, apply ‘Loctite Pipe Sealant With Teflon No. 592’ or equivalent compound on the relief valve

threads. Position the valve as shown in Figure 2 with the discharge port pointing down.

Final Pump Assembly

(Figure 2)

Install the shaft key (22, Figure 4) in the keyways of both shafts and reconnect the power source. Be sure to install any guards used over the rotating members.

WARNING!

Do not operate the pump without the guards in place over the rotating parts. Exposed rotating parts can catch clothing, fingers, or tools, causing severe injury to personnel.

Install the suction and discharge lines and open all valves. Make certain that all piping connections are tight, properly supported and secure.

Be sure the pump and power source have been properly lubricated, see **LUBRICATION**.

Remove the fill cover assembly (29) and fill the pump casing with clean liquid. Install the fill cover gasket and cover. Install the clamp bar (30) and secure it with the capscrew (31). Refer to **OPERATION**, Section C, before putting the pump back into service.

LUBRICATION

Seal Assembly

(Figure 4)

Before starting the pump, remove the vented plug (10) and fill the seal cavity with approximately 60 ounces (1,8 liters) SAE No. 30 non-detergent oil to the middle of the seal oil level sight gauge (14) and maintain it at the middle of the gauge. Clean and reinstall the vented plug. Maintain the oil at this level.

NOTE

The white reflector in the sight gauge must be positioned horizontally to provide proper drainage.

Bearings

(Figure 4)

The bearing housing was fully lubricated when shipped from the factory. Check the oil level regularly through the bearing cavity oil level sight gauge (14) and maintain it at the middle of the gauge. When lubrication is required, add SAE No. 30 non-detergent oil through the hole for the air vent (12). **Do not** over-lubricate. Over-lubrication can cause the bearings to over-heat, resulting in premature bearing failure.

NOTE

The white reflector in the sight gauge must be positioned horizontally to provide proper drainage.

Under normal conditions, drain the bearing housing once each year and refill with approximately 11 ounces (0,3 liter) clean oil. Change the oil more frequently if the pump is operated continuously or installed in an environment with rapid temperature change.

CAUTION

Monitor the condition of the bearing lubricant regularly for evidence of rust or moisture condensation. This is especially important in areas where variable hot and cold temperatures are common.

For cold weather operation, consult the factory or a lubricant supplier for the recommended grade of oil.

Power Source

Consult the literature supplied with the power source, or contact your local power source representative.

For Warranty Information, Please Visit
www.grpumps.com/warranty
or call:
U.S.: 419—755—1280
Canada: 519—631—2870
International: +1—419—755—1352

GORMAN-RUPP PUMPS

C D S W

Discharge Check Valves

4” and 6”

LEFT HAND CHECK VALVE SHOWN

SPECIFICATIONS

Valve Body: Gray Iron No. 30.

Valve Arm: 316 Stainless Steel.

Wetted Hardware: 303/304 Stainless Steel.

Valve Weight: Gray Iron No. 30.

Flap Valve: Nitrile.

O-Rings: Buna-N.

Size	Part Number	
	Left Hand	Right Hand
4” (102 mm)	46421—214	46421—215
6” (152 mm)	46421—416	46421—417

DESCRIPTION

Available in 4” or 6” (102 mm or 152 mm) Sizes for Left Hand (LH) or Right Hand (RH) Piping Installations. Valves are Weighted and Spring-Loaded to Ensure Positive Closure. Full Body Design Allows for Passage of 3” (76,2 mm) Diameter Solids.

Solid Cast Iron Body and Simple Design Provide Dependable Service and Easy Maintenance. Access Cover Allows Servicing of all Internal Parts Without Removing Check Valve From System Piping.

Check Valve Assemblies Include a Stainless Steel Seat and Spring.

Mounting Hardware Not Included.

© Copyright by the Gorman-Rupp Company 2007

APPROXIMATE
DIMENSIONS and WEIGHTS

NET WEIGHT: 4” (102 mm) 47 LBS. (21,3 KG.)
NET WEIGHT: 6” (152 mm) 78 LBS. (35,4 KG.)

4” (102 mm) VALVE ASSEMBLY
PART 46421-214 (Left Hand)
PART 46421-215 (Right Hand)

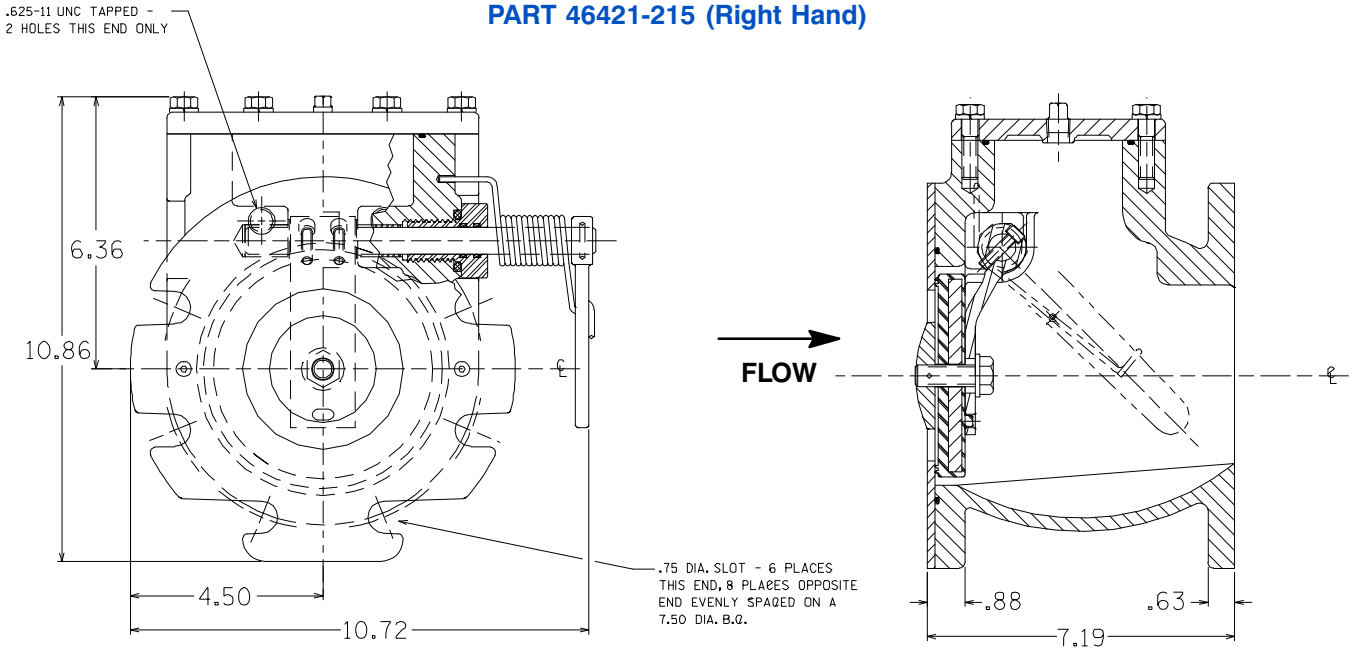

6” (152 mm) VALVE ASSEMBLY
PART 46421-416 (Left Hand)
PART 46421-417 (Right Hand)

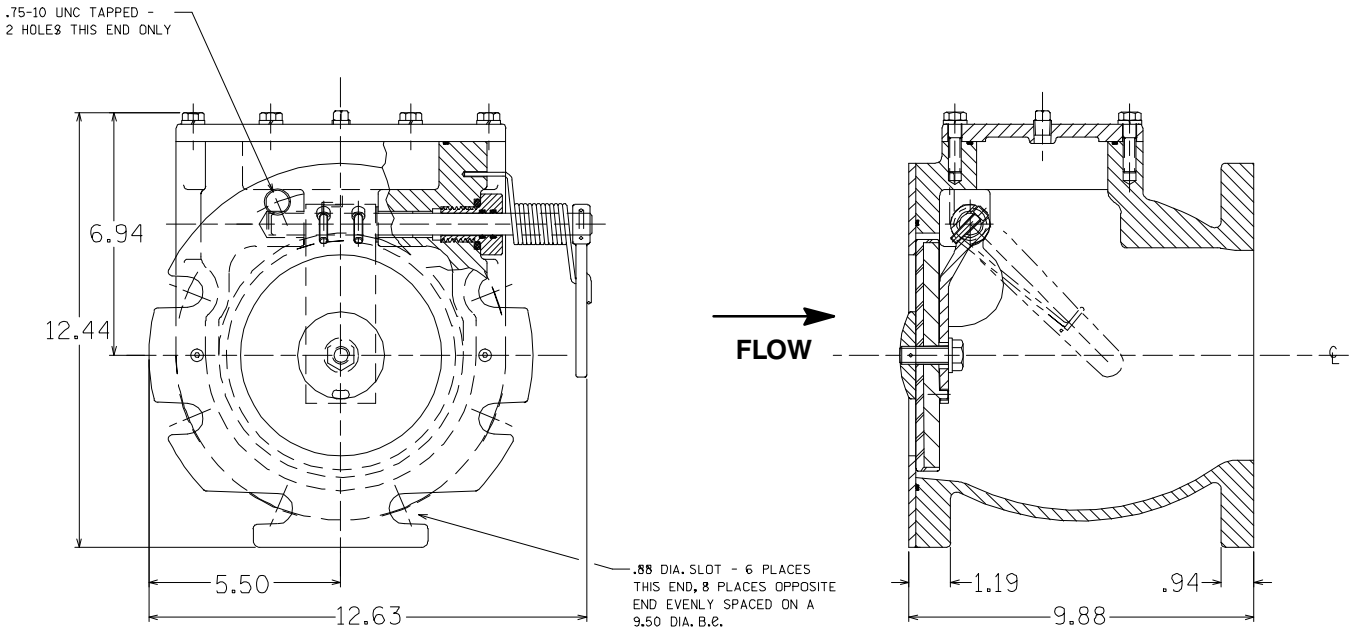

© Copyright by the Gorman-Rupp Company 2007

iMAG 4700 Series
FLANGED MAGMETER

RIGHT METER FOR

- Water & Wastewater Treatment
- Municipal
- Pump skids
- Pump stations
- Packaged plants
- Filtration systems
- Reclaimed water
- Hydraulic fracturing

Features

- Easy setup
- Minimal straight pipe
- Mounted or remote rate & total
- Tamper-evident seal
- NSF-61 approved
- IP68 rated

The **iMAG-Series** is the most economical flanged electromagnetic flowmeter on the market. With electrodes designed to discourage fouling, it is available in 4" to 12" pipe in municipal or industrial water, waste and reclaimed water, pump stations, and packaged plant applications. (For 3" version, see iMAG 4600-300.) Minimal straight pipe requirements allow iMAG-Series meters to be used in piping configurations where there is little space between the meter and an elbow.

iMAG-Series meters are NSF-61 approved and are rated IP68 for applications where the meter may be operated under water to a depth of at least 10 feet (3 meters) continuously.

The display can be meter mounted or remote, and both rate and total indication are standard. Rate and total units and pulse scaling can be set via the front panel touch key pad by the user. Bidirectional flow is standard with forward, reverse and net flow.

A power/output cable allows outputs for use with a variety of Seametrics and other displays and controls for remote reading and telemetry applications. Pulse output is standard on all models and 4-20mA passive current loop is standard on the iMAG 4700p. In addition, 4-20mA loop, HART protocol, high speed digital, and Modbus® protocol outputs are optional on the externally powered units, depending on model.

Contact Your Supplier

iMAG 4700 Series
FLANGED MAGMETER

Features

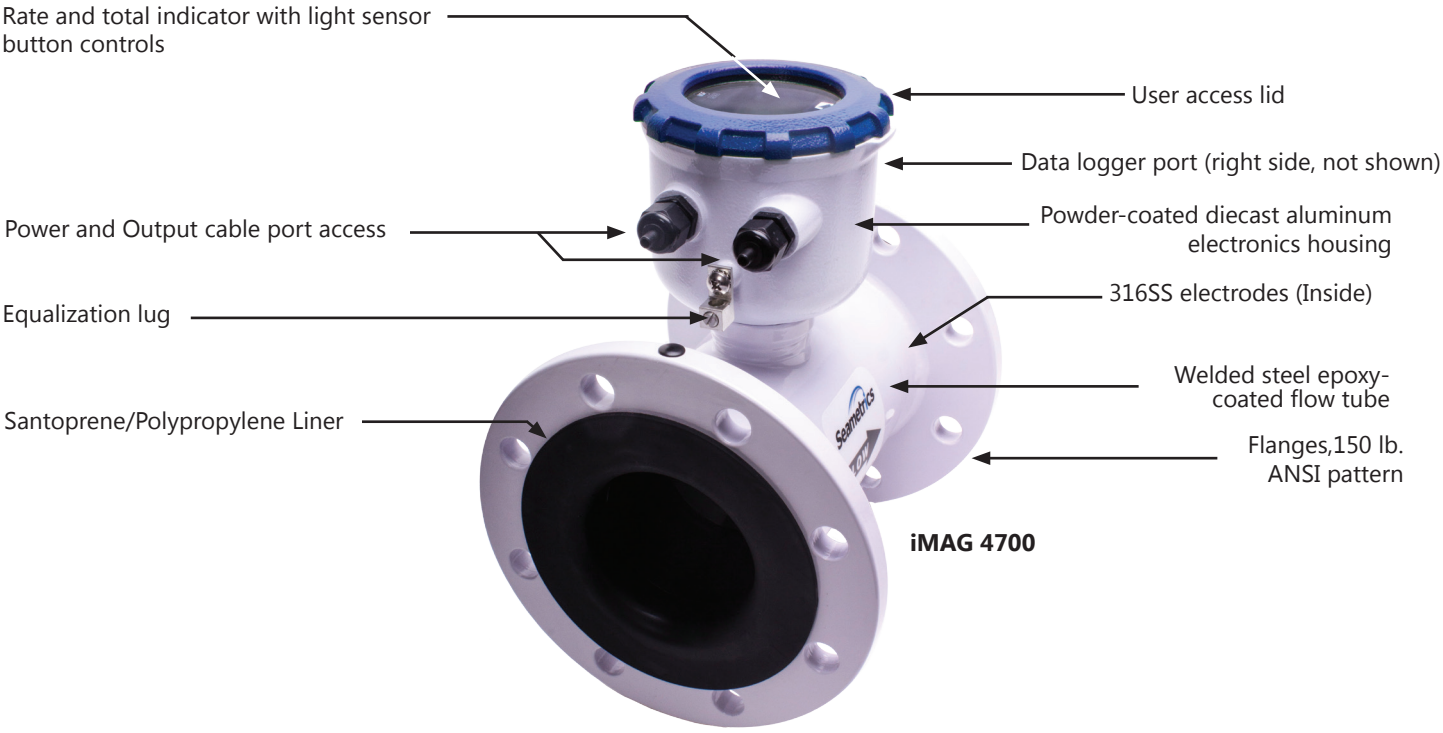

iMAG 4700

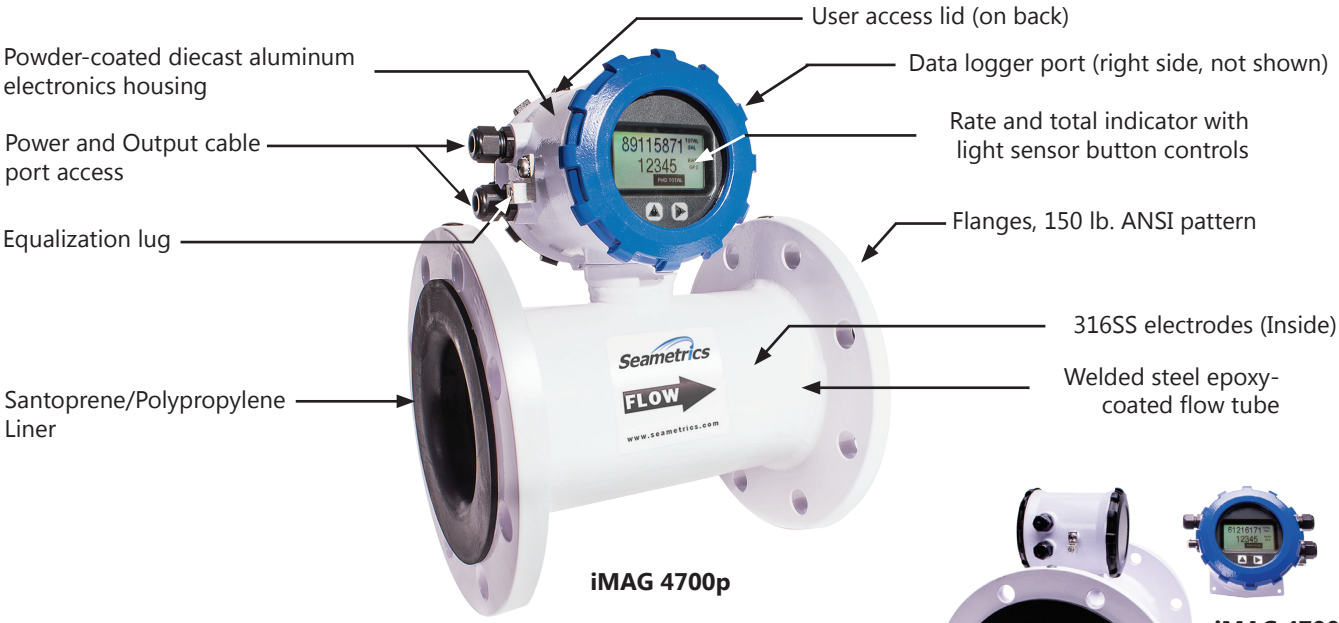

iMAG 4700p

iMAG 4700r
(Remote indicator)

Features

- Built-in Data Logger *(Optional)*
- Bidirectional Flow Reading *(Standard)*
- Pulse Scaled Output *(Standard)*
- 4-20mA Output *(Optional*)*
- HART Protocol Output *(Optional*)*
- Modbus® Protocol Output *(Optional*)*
- High Speed Digital Output *(Optional*)*
- Battery Power *(iMAG 4700 battery model only)*
- External DC Power *(Optional*)*
- Integrated AC Power Supply *(Optional*)*
- Remote Display *(iMAG 4700r)*

Quickly and easily change Total Volume Units, Flow Rate Units, Pulse Output Scaling, and many other settings using the two light sensor button controls on the display panel.

* *Some optional items only available on some configurations. See last page for further details.*

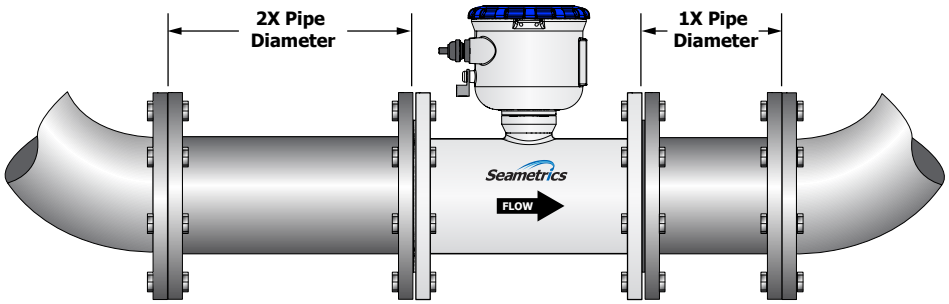

Minimal straight pipe requirements to ease installation in tight quarters.

No moving parts to break or foul!

iMAG 4700 Series
FLANGED MAGMETER

Specifications

Pipe Sizes		4", 6", 8", 10", 12" (For 3" version, see iMAG 4600-300.)
Flanges		150 lb. ANSI Pattern
Pressure		150 psi (10.3 bar) line pressure
Temperature	**Operating**	10˚ to 130˚ F (-12˚ to 54˚ C)
	Storage	-40˚ to 158˚ F (-40˚ to 70˚ C)
Accuracy		±0.75% of reading on iMAG 4700p and 4700r (±1.0% iMAG 4700), ±0.025% of full-scale flow from low flow cutoff to maxi. flow rate of 10 m/sec
Low Flow Cutoff		0.5% of maximum flow rate
Material	**Body** *(4"-12")*	Welded steel, epoxy-coated
	Liner *(4"-12")*	Santoprene flange/Polypropylene liner body
	Electronics Housing	Powder-coated diecast aluminum
	Electrodes	316 stainless steel
Display	**Type**	128x64 dot-matrix LCD
	Digits	5 Digit Rate / 8 Digit Total
	Units *Please Note:* *All iMAG meters are factory set for gallons per minute (GPM) rate and gallons total. If other units are required, they can be set in the field.*	Rate Volume Units: Gallons, Liters, Barrels(42 gal), Cubic Feet, Cubic Meters; Million Gallons[2], Mega Liters, Imperial Gallons, Million Imperial Gallons[2] Rate Time Units: Second, Minute, Hour, Day Total Volume Units: Gallons, Gallons x 1000, Million Gallons, Liters, Kilo Liters, Mega Liters, Barrels(42 gal); Cubic Meters, Cubic Meters x 1000, Cubic Feet, Cubic Feet x 1000, Million Cubic Feet; Imperial Gallons, Imperial Gallons x 1000, Million Imperial Gallons
	Bidirectional[1]	Forward Total, Reverse Total, Net Total
Power	**DC Power**	9-36 Vdc @ 250 mA max, 30 mA average
	Battery Backup	DC powered units: Two lithium 3.6V 'D' batteries, replaceable. AC powered units: Two lithium 3.6V 'AA' batteries, replaceable.
	AC Power *(iMAG 4700r and 4700p only)*	85-264Vac, 50/60Hz, 0.12A
	Battery *(iMAG 4700 only)*	Two lithium 3.6V 'D' batteries, replaceable.
Scaled Pulse Output	**Signal**	Current sinking pulse, isolated, 36 Vdc at 10 mA max
	Pulse Rates	User-scalable from 0.1 to 99,999.9 volume units/pulse. Pulse width is one-half of pulse period with minimum pulse width of 2.5 ms, 200 pulses/sec max, 150 pulses/sec max with battery option
Options	**4-20mA Current Loop**	Isolated, passive, 24Vdc, 650 Ω maximum current loop
	HART/4-20mA	HART protocol over 4-20mA line
	High Speed Digital Output *(iMAG 4700 & 4700p only)*	Isolated, open collector, 24 Vdc
	Serial Communications	Isolated, asynchronous serial RS485 (Reconfigurable for RS232 or 3.3V CMOS), Modbus® RTU protocol (factory selectable)
Cable	**Power/Output Cable**	20ft (6m) standard length polyurethane jacketed cable—for power and outputs (lengths up to 200' available).
	Remote Display Cable *(iMAG 4700r)*	20ft (6m) standard length polyurethane jacketed cable—for connection between meter and remote display (lengths up to 200' available).
Conductivity		>20 microSiemens/cm
Empty Pipe Detection		Hardware/software, conductivity-based
Regulatory		CE (EN 61326) pending, NSF-61
Environmental		IP68 (10ft (3m) depth, continuously)

Modbus is a registered trademark of Schneider Electric.

* *Specifications subject to change. Please consult our website for the most current data (www.seametrics.com).*

[1] *If forward and reverse flow data needs to be sent to another device, either the Digital or Modbus output is required.*

[2] *Rate Time Unit is available in Day only.*

iMAG Accuracy

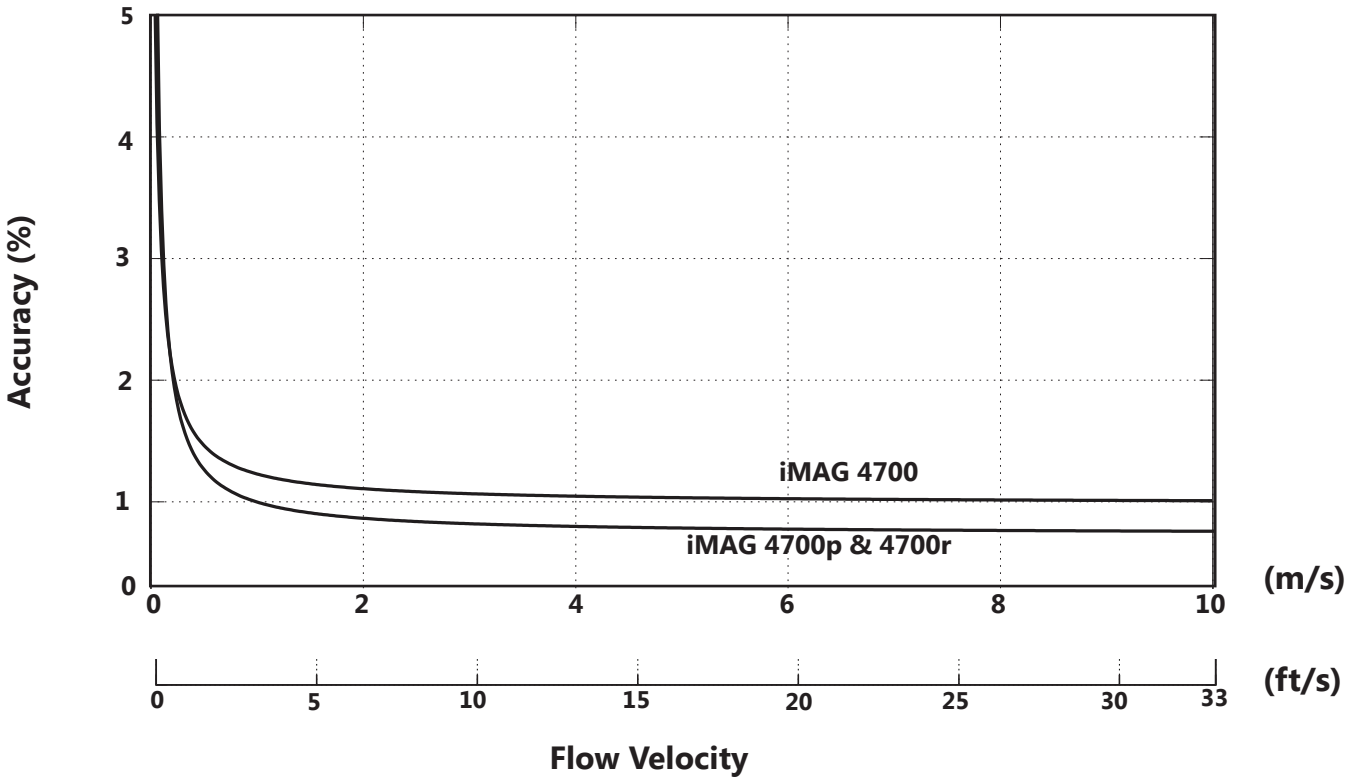

Flow Rate (4" - 12")

Pipe Size *(Inches in diameter)*	4"	6"	8"	10"	12"
Max Flow Rate *(Gallons/Minute)*	1285	2891	5140	8031	11565
Cut-off (min) Flow Rate *(Gallons/Minute)*	6.43	14.46	25.70	40.15	57.82
Max Flow Rate *(Liters/Second)*	81	182	324	507	730
Cut-off (min) Flow Rate *(Liters/Second)*	0.41	0.91	1.62	2.54	3.65
Max Flow Velocity *(Meters/Second)*	10	10	10	10	10

Dimensions - iMAG 4700

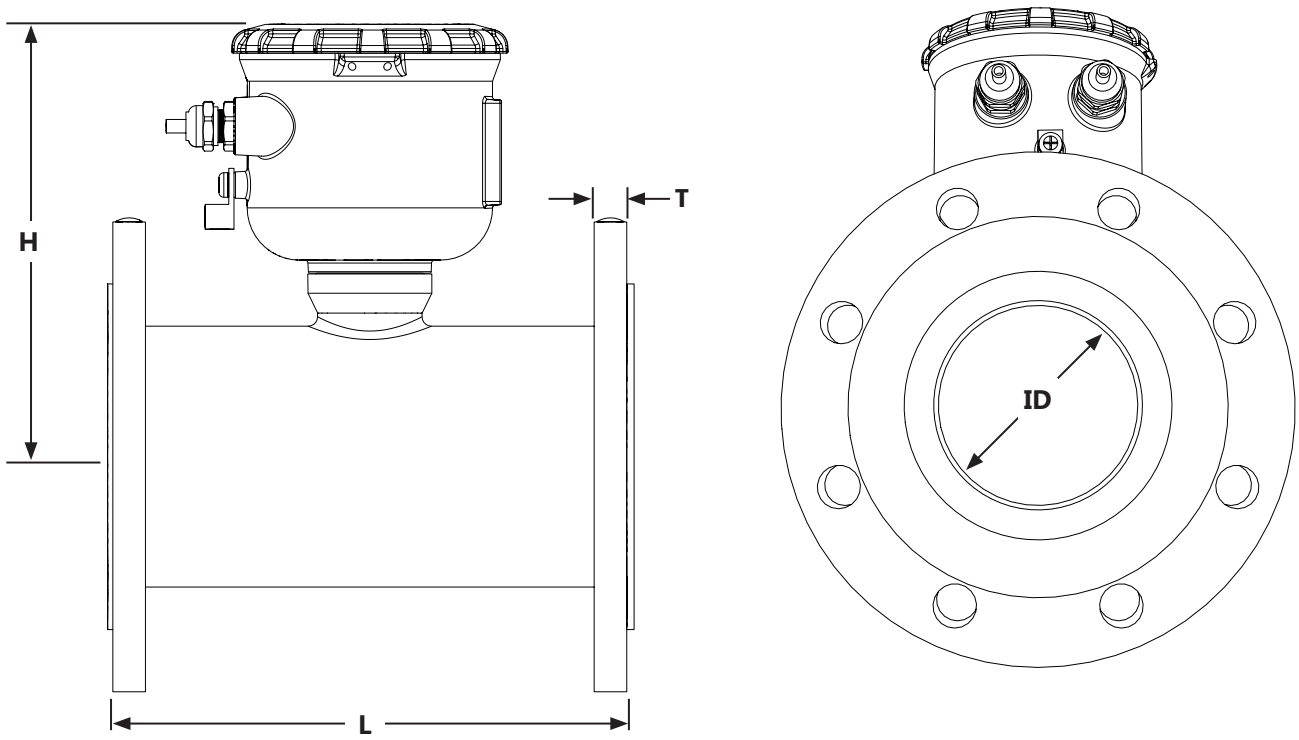

iMAG Meter Size	L		H		T		ID		Shipping Weight		Flange Bolt Torque	
	inch	mm	inch	mm	inch	mm	inch	mm	pounds	Kg	ft-lb	Nm
4”	10.24	260	8.3	211	.62	15.7	3.12	79	25	11.5	20	27
6”	12.27	312	9.1	231	.69	17.5	5.05	128	40	18	42	57
8”	14.24	362	10.1	257	.69	17.5	6.44	164	62	28	65	88
10”	18.18	462	11.2	284	.69	17.5	8.61	219	118	53.5	73	99
12”	19.68	500	12.2	310	.81	20.6	10.55	268	160	72.5	97	132
Flanges	Standard ANSI 150 lb. drilling								Cable 1 lb.		REPEAT CROSS-TIGHTENING PATTERN TO FINAL TORQUE VALUE	

Dimensions - iMAG 4700r and iMAG 4700p

iMAG 4700r (remote)

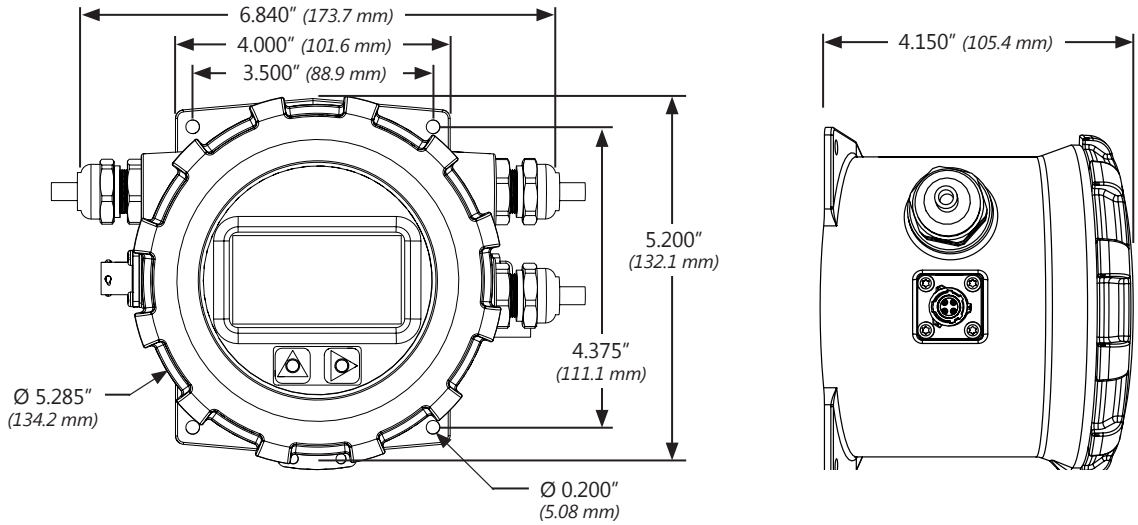

iMAG 4700p

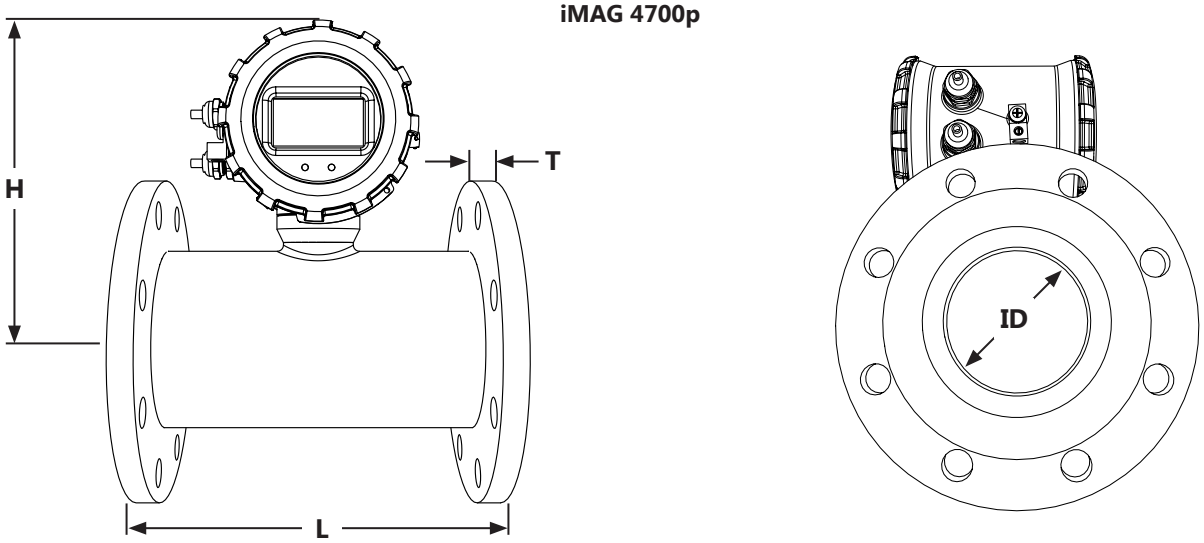

iMAG Meter Size	L		H		T		ID		Shipping Weight		Flange Bolt Torque	
	inch	mm	inch	mm	inch	mm	inch	mm	pounds	Kg	ft-lb	Nm
4″	10.24	260	8.6	218	.62	15.7	3.12	79	27	12	20	27
6″	12.27	312	9.4	239	.69	17.5	5.05	128	42	19	42	57
8″	14.24	362	10.4	264	.69	17.5	6.44	164	64	29	65	88
10″	18.18	462	11.5	292	.69	17.5	8.61	219	120	54.5	73	99
12″	19.68	500	12.5	317	.81	20.6	10.55	268	162	73.5	97	132
Remote Display shipped separately									2.75	1.25	n/a	n/a
Flanges	Standard ANSI 150 lb. drilling								Cable 1 lb.		REPEAT CROSS-TIGHTENING PATTERN TO FINAL TORQUE VALUE	

iMAG 4700 Series
FLANGED MAGMETER

Seametrics

How to Order Worksheet

	1	2	3	4	5	6	7
iMAG 4700	☐☐☐☐	☐☐	☐☐	☐	☐☐	☐☐☐☐	
iMAG 4700p	☐☐☐☐	☐☐	☐☐	☐	☐☐	☐☐☐☐	
iMAG 4700r	☐☐☐☐	☐☐	☐☐	☐	☐☐	☐☐☐☐	☐☐☐

2 Style: F1 = 150 lb ANSI Pattern

3 Power: D1 = DC 60Hz, D2 = DC 50Hz
A1 = AC 60Hz, A2 = AC 50Hz
BX = Battery

4 Outputs: X = No optional output
L = 4-20mA S = Modbus®
H = HART/4-20mA G = Digital

iMAG 4700 (Integrated Display)

1 Size[1]	2 Style	3 Power	4 Optional Output (The 4700 comes standard with one pulse output)	5 Options	6 DC Power/Output Cable - 6 conductor (Must select one)
-0400 4″	-F1	-D1	-X *(requires single cable for DC power & output)*	-XX None	-0000 No Cable
-0600 6″		-D2	-L *(requires single cable for DC power & output)*	-01 Data Logger	Single / Dual
-0800 8″			-H *(requires single cable for DC power & output)*		-006S / -006D 6 meter (20 ft)
-1000 10″			-S *(requires dual cable for DC power & output)*		-015S / -015D 15 meter (50 ft)
-1200 12″			-G *(requires dual cable for DC power & output)*		-030S / -030D 30 meter (100 ft)
					-045S / -045D 45 meter (150 ft)
		-BX	-X *(requires single cable for pulse output)*		-060S / -060D 60 meter (200 ft)

iMAG 4700p (Integrated Display)

1 Size[1]	2 Style	3 Power[2]	4 Optional Output (The 4700p comes standard with 4-20mA and one pulse output)	5 Options	6 DC Power/Output Cable - 8 conductor (Must select one)
-0400 4″	-F1	-D1	-X *(requires single cable for DC power & output)*	-XX None	-0000 No Cable
-0600 6″		-D2	-H *(requires single cable for DC power & output)*	-01 Data Logger	Single / Dual
-0800 8″			-S *(requires dual cable for DC power & output)*		-006S / -006D 6 meter (20 ft)
-1000 10″			-G *(requires dual cable for DC power & output)*		-015S / -015D 15 meter (50 ft)
-1200 12″					-030S / -030D 30 meter (100 ft)
		-A1	-X *(requires single cable for output)*		-045S / -045D 45 meter (150 ft)
		-A2	-H *(requires single cable for output)*		-060S / -060D 60 meter (200 ft)
			-S *(requires single cable for output)*		
			-G *(requires single cable for output)*		

iMAG 4700r (Remote Display)

1 Size[1]	2 Style	3 Power[2]	4 Optional Output (The 4700r comes standard with one pulse output)	5 Options	6 DC Power/Output Cable - 6 conductor (Must select one)	7 Remote Display Cable - 6 conductor (Must select one)
-0400 4″	-F1	-D1	-X *(requires single cable for DC power and output)*	-XX None	-0000 No Cable	-006 6 meter (20 ft)
-0600 6″		-D2	-L *(requires single cable for DC power and output)*	-01 Data Logger	Single / Dual	-015 15 meter (50 ft)
-0800 8″			-H *(requires single cable for DC power and output)*		-006S / -006D 6 meter (20 ft)	-030 30 meter (100 ft)
-1000 10″			-S *(requires dual cable for DC power and output)*		-015S / -015D 15 meter (50 ft)	-045 45 meter (150 ft)
-1200 12″					-030S / -030D 30 meter (100 ft)	-060 60 meter (200 ft)
		-A1	-X *(requires single cable for output)*		-045S / -045D 45 meter (150 ft)	
		-A2	-L *(requires single cable for output)*		-060S / -060D 60 meter (200 ft)	
			-H *(requires single cable for output)*			
			-S *(requires single cable for output)*			

Modbus is a registered trademark of Schneider Electric. Viton is a registered trademark of DuPont Corporation.

Note: All iMAG meters are factory set for gallons per minute (GPM) rate and gallons total. If other units are required, they can be programmed in the field.

[1] *For 3″ version see iMAG 4600-300.*

[2] *AC meters come with a 1.8 meter (6 ft) AC power cable.*

Seametrics • 19026 72nd Avenue South • Kent, Washington 98032 • USA
(P) 253.872.0284 • (F) 253.872.0285 • 1.800.975.8153 • seametrics.com

LT-14249r1.0-20160401
4/1/16

Product information

Radar

Level measurement in liquids

VEGAPULS WL 61
VEGAPULS 61
VEGAPULS 62
VEGAPULS 63
VEGAPULS 64
VEGAPULS 65
VEGAPULS 66

Document ID: 29019

Contents

1 Measuring principle ... 3
2 Type overview ... 4
3 Instruments and applications ... 6
4 Selection criteria ... 8
5 Measuring range dimensioning ... 9
6 Housing overview ... 10
7 Mounting ... 11
8 Electronics - 4 … 20 mA/HART - two-wire ... 13
9 Electronics - 4 … 20 mA/HART - four-wire ... 14
10 Electronics - Profibus PA ... 15
11 Electronics - Foundation Fieldbus ... 16
12 Electronics - Modbus, Levelmaster protocol ... 17
13 Adjustment ... 18
14 Dimensions ... 20

Take note of safety instructions for Ex applications

Please note the Ex specific safety information that you can find at www.vega.com and that comes with each instrument. In hazardous areas you should take note of the appropriate regulations, conformity and type approval certificates of the sensors and power supply units. The sensors must only be operated on intrinsically safe circuits. The permissible electrical values are stated in the certificate.

1 Measuring principle

Measuring principle VEGAPULS WL 61, 61, 62, 65, 66

Extremely short microwave pulses are transmitted by the antenna system to the measured product, reflected by the product surface and received back by the antenna system. The time from emission to reception of the signals is proportional to the level in the vessel. A special time stretching procedure ensures reliable and precise measurement of the extremely short transmission periods and the conversion into level.

The radar sensors operate with low emitted power in the C and K band frequency range.

Measuring principle VEGAPULS 64

The sensor emits a continuous, high frequency radar signal through the antenna. The emitted signal is reflected by the product surface and received as an echo by the antenna.

The difference between the emitted and received signal is determined by special algorithms in the sensor electronics and converted into level.

The VEGAPULS 64 operates with low emitted power in the W band frequency range.

Applications in liquids

Low frequency C band sensors are used for continuous level measurement of liquids under difficult process conditions. They are suitable for applications in storage tanks, process vessels or standpipes and can be used universally thanks to the different antenna versions.

The high frequency K band sensors are universally implementable for continuous level measurement of liquids. They are suitable for level measurement in storage containers, reactors and process vessels, even under difficult process conditions. With the various antenna versions and materials, they are the optimal solution for almost all applications and processes.

The high frequency W band sensors are suitable for continuous level measurement of liquids. The small process fittings offer particular advantages in small tanks or tight mounting spaces. The very good signal focusing ensures the use in vessels with many installations such as stirrers and heating spirals.

Advantages

Non-contact radar technology is characterized by extremely high accuracy. The measurement is influenced neither by fluctuating product features nor by changing process conditions such as temperature and pressure.

Input variable

The measured quantity is the distance between process fitting of the sensor and product surface. Depending on the sensor version, the reference plane is the seal surface on the hexagon or the lower side of the flange.

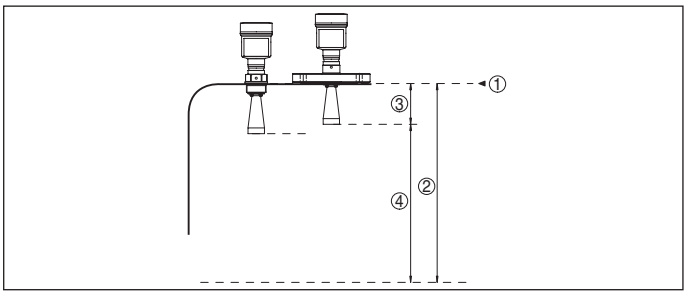

Fig. 1: Data of the input variable with VEGAPULS 62

1 *Reference plane*
2 *Measured variable, max. measuring range*
3 *Antenna length*
4 *Utilisable measuring range*

2 Type overview

	VEGAPULS WL 61	VEGAPULS 61	VEGAPULS 62
Applications	Water processing, pump stations, storm water overflow tank, flow measurement in open flumes and level monitoring	Corrosive liquids in small vessels under easy process conditions	Storage tanks and process vessels under extremely difficult process conditions
Max. measuring range	15 m (49.21 ft)	35 m (114.8 ft)	35 m (114.8 ft)
Antenna/Material	Plastic horn antenna	Plastic horn antenna/completely PVDF encapsulated	Horn antenna or standpipe antenna ½"/316L
Process fitting/Material	Thread G1½/PBT or mounting strap/316L	Thread G1½/PVDF, mounting strap/316L or flange/PP	Thread G1½/316L according to DIN 3852-A or flange/316L, Alloy C22 (2.4602)
Process temperature	-40 … +80 °C -40 … +176 °F)	-40 … +80 °C (-40 … +176 °F)	-196 … +450 °C (-321 … +842 °F)
Process pressure	-1 … +2 bar/-100 … +200 kPa (-14.5 … +29.0 psi)	-1 … +3 bar/-100 … +300 kPa (-14.5 … +43.5 psi)	-1 … +160 bar/-100 … +16000 kPa (-14.5 … +2320 psig)
Deviation	≤ 2 mm	≤ 2 mm	≤ 2 mm
Frequency range	K-band	K-band	K-band
Signal output	● 4 … 20 mA/HART - two-wire ● Profibus PA ● Foundation Fieldbus	● 4 … 20 mA/HART - two-wire ● 4 … 20 mA/HART - four-wire ● Profibus PA ● Foundation Fieldbus ● Modbus and Levelmaster protocol	
Indication/Adjustment	● PACTware ● VEGADIS 62	● PLICSCOM ● PACTware ● VEGADIS 81 ● VEGADIS 62	
Approvals	● ATEX ● IEC	● ATEX ● IEC ● Shipbuilding ● Overfill protection ● FM ● CSA ● EAC (Gost)	

VEGAPULS 63	VEGAPULS 64	VEGAPULS 65	VEGAPULS 66
Aggressive liquids under extremely difficult process conditions	Liquids under extremely difficult process conditions	Aggressive liquids under easy process conditions	Storage tanks and process vessels under extremely difficult process conditions
35 m (114.83 ft)	30 m (98.43 ft)	35 m (114.83 ft)	35 m (114.83 ft)
Completely encapsulated antenna system/PTFE, PFA or PVDF	Thread with integrated horn antenna/PEEK and 316L or Alloy C22 (2.4602), plastic horn antenna/PP, flange with encapsulated antenna system/PTFE and PFA	Rod antenna, PVDF or PTFE encapsulated, PFA plated	Horn antenna or standpipe antenna 2", 316L
Flange or hygienic fitting/316L, Alloy 400 (2.4360)	Mounting strap/316L, thread/316L, flange/316L or Alloy C22 (2.4602), hygienic fittings/316	Thread G1½ according to DIN 3852-A/PVDF or 316L, flange/PTFE-plated	Flange/316L, Alloy C22 (2.4602)
-196 … +200 °C (-321 … +392 °F)	-196 … +200 °C (-321 … +392 °F)	-40 … +150 °C (-40 … +302 °F)	-60 … +400 °C (-76 … +752 °F)
-1 … +16 bar/-100 … +1600 kPa (-14.5 … +232 psig)	-1 … 25 bar/-100 … 2500 kPa (-14.5 … 362.5 psig)	-1 … +16 bar/-100 … +1600 kPa (-14.5 … +232 psig)	-1 … +160 bar/-100 … +16000 kPa (-14.5 … +2321 psi)
≤ 2 mm	≤ 1 mm	≤ 8 mm	≤ 8 mm
K-band	W-band	C-band	C-band
● 4 … 20 mA/HART - two-wire ● 4 … 20 mA/HART - four-wire ● Profibus PA ● Foundation Fieldbus ● Modbus and Levelmaster protocol	● 4 … 20 mA/HART - two-wire	● 4 … 20 mA/HART - two-wire ● 4 … 20 mA/HART - four-wire ● Profibus PA ● Foundation Fieldbus ● Modbus and Levelmaster protocol	
● PLICSCOM ● PACTware ● VEGADIS 81 ● VEGADIS 62	● PLICSCOM ● PACTware ● VEGADIS 81 ● VEGADIS 82	● PLICSCOM ● PACTware ● VEGADIS 81 ● VEGADIS 62	
● ATEX ● IEC ● Shipbuilding ● Overfill protection ● FM ● CSA ● EAC (Gost)	● ATEX ● IEC ● Shipbuilding ● Overfill protection ● FM ● CSA ● EAC (Gost)	● ATEX ● IEC ● Shipbuilding ● Overfill protection ● FM ● CSA	

3 Instruments and applications

VEGAPULS WL 61
VEGAPULS WL 61 is the ideal sensor for all applications in water and sewage water applications. It is particularly suitable for use in water processing, pump stations as well as overflow basins, for flow measurement in open flumes and gauge monitoring. VEGAPULS WL 61 provides an economical solution through versatile and simple mounting options. The flood-proof IP 68 housing ensures continuous, maintenance-free operation.

VEGAPULS 61
The VEGAPULS 61 is a sensor for continuous level measurement of liquids under simple process conditions. Due to its simple and versatile mounting options, VEGAPULS 61 offers a truly cost-effective solution. The encapsulated antenna system ensures maintenance-free operation.

The version with encapsulated antenna system is particularly suitable for level measurement of aggressive liquids in small vessels. The version with plastic horn antenna is particularly suitable for flow measurement in open flumes or gauge measurement of open waters.

VEGAPULS 62
VEGAPULS 62 is a universally implementable sensor for continuous level measurement of liquids. It is suitable for level measurement in storage containers, reactors and process vessels, even under difficult process conditions. With its various antenna versions and materials, VEGAPULS 62 is the optimal solution for almost all applications and processes. Its wide temperature and pressure range makes project planning simple.

The version with horn antenna is particularly suitable for storage tanks and process vessels for measurement of products like solvents, hydrocarbons and fuels. The version with parabolic antenna is particularly suitable for measurement of products with low ε_r value at large measuring distances.

VEGAPULS 63
The VEGAPULS 63 is a sensor for continuous level measurement of aggressive liquids or liquids with hygienic requirements. It is suitable for applications in storage tanks, process vessels, dosing vessels and reactors. The encapsulated antenna system of VEGAPULS 63 protects against pollution and ensures continuous, maintenance-free operation. Front-flush mounting ensures optimum cleanability even in case of the most stringent hygienic requirements.

VEGAPULS 64
The VEGAPULS 64 is a radar sensor for continuous level measurement of liquids.

Special advantages result from the small process fittings for small tanks and the very good focussing in applications in large tanks. This is made possible by the high emitting frequency of 80 GHz with an especially small beam angle.

VEGAPULS 65
The VEGAPULS 65 is a radar sensor for continuous measurement of liquids under simple process conditions. It is particularly suitable for level measurement in vessels with small process fittings and simple process conditions. The slim rod antenna allows installation in small vessel openings.

VEGAPULS 66
The VEGAPULS 66 is a radar sensor for continuous level measurement of liquids under difficult process conditions. It is suitable for applications in storage tanks, process vessels or standpipes. VEGAPULS 66 can be used universally thanks to its different antenna versions.

Application areas
The radar sensors of the VEGAPULS series described in this manual are used for non-contact level measurement of liquids. They measure all kinds of liquids, even under high pressure and at extreme temperatures. The sensors can be used in simple but also aggressive liquids and are suitable for applications with maximum hygienic requirements.

Level measurement in vessels
For level measurement in vessels with conical bottom it can be advantageous to mount the sensor in the centre of the vessel, as measurement is then possible down to the bottom.

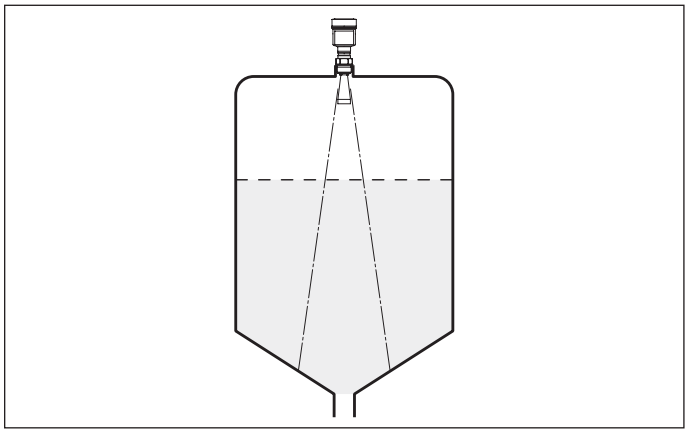

Fig. 9: Level measurement in vessels with conical bottom

Measurement in a surge pipe
By using a surge pipe in the vessel, influences from internal vessel installations and turbulence can be excluded. Under these prerequisites, the measurement of products with low dielectric values (ε_r value ≥ 1.6) is possible. In very adhesive products, measurement in a surge pipe is not recommended.

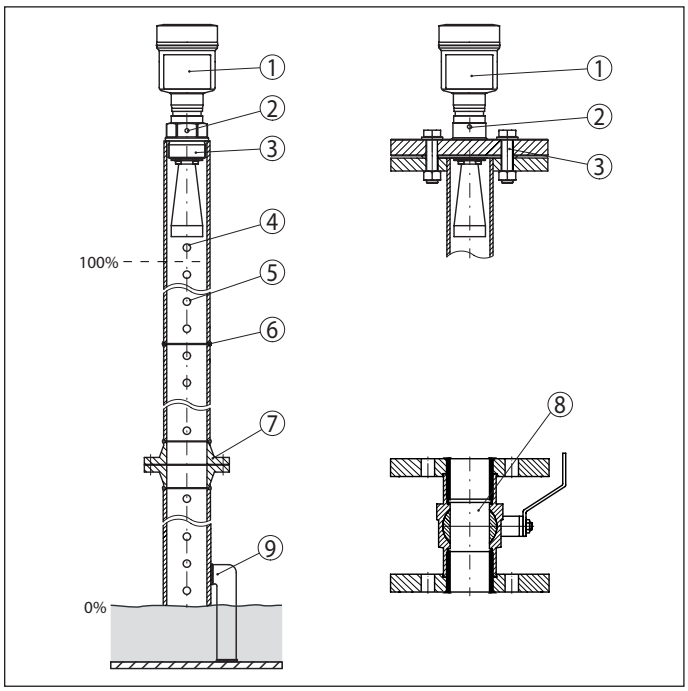

Fig. 10: Configuration surge pipe

1 *Radar sensor*
2 *Polarisation marking*
3 *Thread or flange on the instrument*
4 *Vent hole*
5 *Holes*
6 *Weld joint*
7 *Welding neck flange*
8 *Ball valve with complete opening*
9 *Fastening of the surge pipe*

Flow measurement
Flow measurement in open flumes with a defined constriction, such as e.g. a rectangular overflow, can be realized with a level measurement.

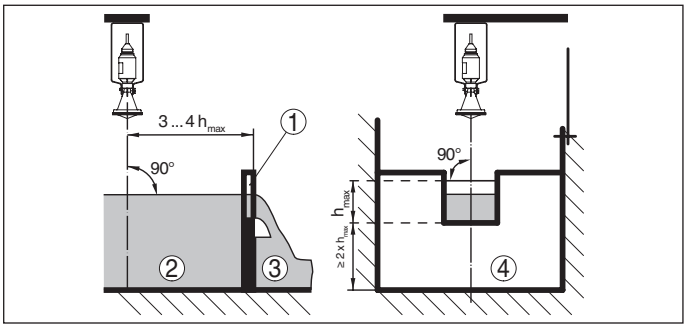

Fig. 11: Flow measurement with rectangular overflow: $d_{min.}$ minimum distance of the sensor; $h_{max.}$ = max. filling of the rectangular overflow

1 Overflow orifice (side view)
2 Headwater
3 Tailwater
4 Overfall orifice (view from tailwater)

Measurement in difficult applications

The electronics version with increased sensitivity enables use of the instrument also in applications with very poor reflective properties and products with low ε_r value.

4 Selection criteria

		VEGAPULS						
		WL 61	61	62	63	64	65	66
Vessel	Small vessels	●	●	–	●	●	–	–
	Storage tanks	●	●	●	●	●	●	●
	Process vessels	–	–	●	●	●	–	●
Process	Simple process conditions	●	●	●	●	●	●	●
	Extremely difficult process conditions	–	–	●	●	●	–	●
	Aggressive liquids	–	●	–	●	●	●	●
	Bubble or foam generation	–	–	–	–	●	●	●
	Wave movements at the surface	–	–	–	–	●	●	●
	Steam or condensation	●	●	●	●	●	–	●
	Buildup	●	●	●	●	●	–	●
	Flow measurement	●	●	●	–	●	–	–
Installation	Front flush installation	●	●	–	●	●	–	–
	Threaded fittings	●	●	●	–	●	●	–
	Flange connections	●	●	●	●	●	●	●
	Hygienic fittings	–	●	–	●	●	●	–
	Mounting strap	●	●	–	–	●	–	–
Antenna	Antenna extension	–	–	●	–	–	–	●
	Standpipe antenna	–	–	●	–	–	–	●
	Narrow transmission lobe	–	–	●	●	●	–	–
	Measurement in a bypass tube or surge pipe	●	●	●	●	–	–	●
	Rinsing air connection	–	–	●	–	–	–	●
Suitability for industry-specific applications	Chemical	–	–	●	●	●	–	–
	Power generation	●	●	–	●	●	–	–
	Foodstuffs	–	–	–	●	●	–	–
	Metal production	–	–	●	–	–	–	–
	Offshore	–	–	–	–	●	–	●
	Paper	–	●	●	●	●	–	–
	Petrochemical	–	–	●	●	●	–	●
	Pharmaceutical	–	●	–	●	●	–	–
	Shipbuilding	–	–	–	●	●	–	●
	Environment and recycling industry	–	–	●	●	●	–	●
	Water, waste water	●	●	–	–	●	–	●
	Cement industry	–	–	●	–	–	–	–

5 Measuring range dimensioning

Vessel

Applications	Storage tank 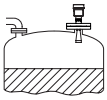		Storage tank with product circulation 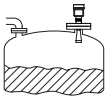		Stirrer vessel 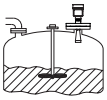	
VEGAPULS 62	DN 50 (antenna ø 48 mm)	DN 80 (antenna ø 75 mm) DN 100 (antenna ø 95 mm)	DN 50 (antenna ø 48 mm)	DN 80 (antenna ø 75 mm) DN 100 (antenna ø 95 mm)	DN 50 (antenna ø 48 mm)	DN 80 (antenna ø 75 mm) DN 100 (antenna ø 95 mm)
VEGAPULS 63	DN 50	DN 80, DN 100	DN 50	DN 80, DN 100	DN 50	DN 80, DN 100
Dielectric constant <3	up to 20 m (65.62 ft)	up to 35 m (114.83 ft)	up to 20 m (65.62 ft)	up to 35 m (114.83 ft)	up to 10 m (32.81 ft)	up to 20 m (65.62 ft)
Dielectric constant 3 … 10	up to 20 m (65.62 ft)	up to 35 m (114.83 ft)	up to 20 m (65.62 ft)	up to 35 m (114.83 ft)	up to 10 m (32.81 ft)	up to 20 m (65.62 ft)
Dielectric constant >10	up to 20 m (65.62 ft)	up to 35 m (114.83 ft)	up to 20 m (65.62 ft)	up to 35 m (114.83 ft)	up to 20 m (65.62 ft)	up to 35 m (114.83 ft)

Measurement tubes

Applications	Surge pipe		Bypass	
VEGAPULS 62	DN 50 (antenna ø 48 mm)	DN 80 (antenna ø 75 mm) DN 100 (antenna ø 95 mm)	DN 50 (antenna ø 48 mm)	DN 80 (antenna ø 75 mm) DN 100 (antenna ø 95 mm)[1]
VEGAPULS 63	DN 50	DN 80, DN 100	DN 50	DN 80, DN 100
Dielectric constant <3	up to 30 m (98.43 ft)	up to 35 m (114.83 ft)	up to 30 m (98.43 ft)	up to 35 m (114.83 ft)
Dielectric constant 3 … 10	up to 30 m (98.43 ft)	up to 35 m (114.83 ft)	up to 30 m (98.43 ft)	up to 35 m (114.83 ft)
Dielectric constant >10	up to 30 m (98.43 ft)	up to 35 m (114.83 ft)	up to 30 m (98.43 ft)	up to 35 m (114.83 ft)

[1] Free radiating radar possible, however, guided radar is recommended as there is less influence from bypass openings.

6 Housing overview

Plastic PBT		
Protection rating	IP 66/IP 67	IP 66/IP 67
Version	Single chamber	Double chamber
Application area	Industrial environment	Industrial environment

Aluminium		
Protection rating	IP 66/IP 67, IP 66/IP 68 (1 bar)	IP 66/IP 67, IP 66/IP 68 (1 bar)
Version	Single chamber	Double chamber
Application area	Industrial environment with increased mechanical stress	Industrial environment with increased mechanical stress

Stainless steel 316L			
Protection rating	IP 66/IP 67	IP 66/IP 67, IP 66/IP 68 (1 bar)	IP 66/IP 67, IP 66/IP 68 (1 bar)
Version	Single chamber, electropolished	Single chamber, precision casting	Double chamber, precision casting
Application area	Aggressive environment, food processing, pharmaceutical	Aggressive environment, extreme mechanical stress	Aggressive environment, extreme mechanical stress

7 Mounting

Installation position

The sensor is mounted in a position which is at least 200 mm (7.874 in) away from the vessel wall. If the sensor is installed in the center of dished or round vessel tops, multiple echoes can arise. However, these can be suppressed by an appropriate adjustment.

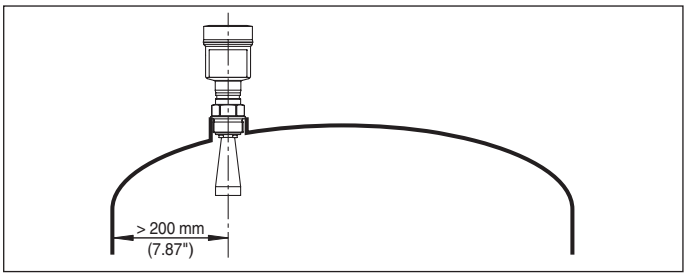

Fig. 24: Mounting of the radar sensor on round vessel tops

Mounting examples

The following illustrations show mounting examples and measurement setups for the individual sensors.

Pump shaft

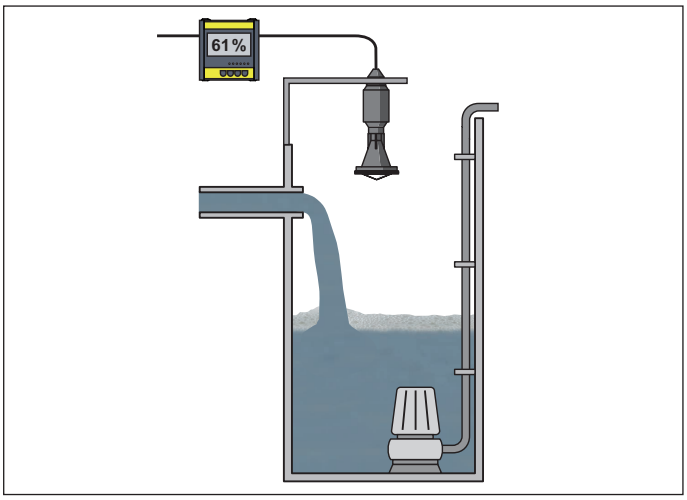

Fig. 25: Level measurement in the pump shaft with VEGAPULS WL 61

The strongly focussed measuring signal of VEGAPULS WL 61 offers considerable advantages particularly in tight spaces. The sensor operates reliably even with foam and buildup on the shaft wall.

Acid tank

Fig. 26: Level measurement in an acid tank with VEGAPULS 61

A non-contact measuring principle is particularly suitable for level measurement in acid tanks.

VEGAPULS 61 is characterised by a small process fitting and a PVDF encapsulated antenna. The sensor is insensitive to temperature fluctuations and gas phases.

Reactor

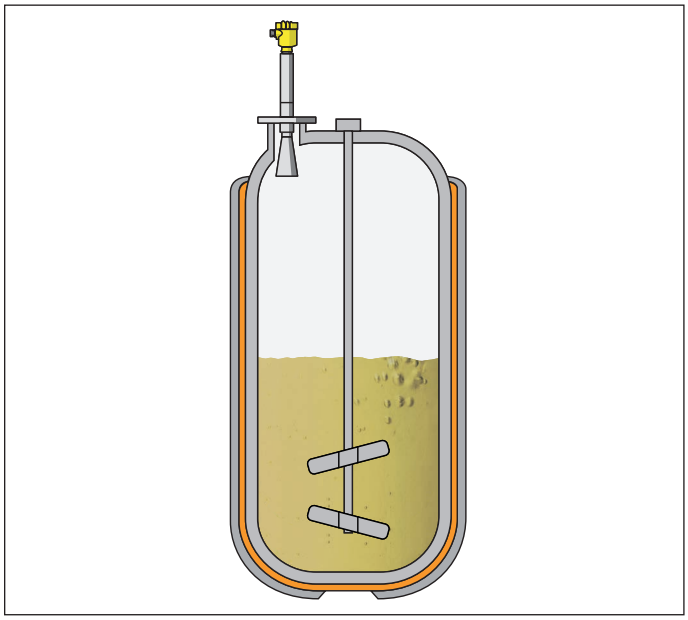

Fig. 27: Level measurement in a reactor with VEGAPULS 62

For the production of resins, different basic substances are mixed with solvents and a reaction is caused by adding process heat.

Non-contact measurement with the radar sensor VEGAPULS 62 is ideal for use in the production of reaction products. Since the measurement is performed without direct contact to the medium, virtually no buildup forms on the sensor.

Sugar evaporator

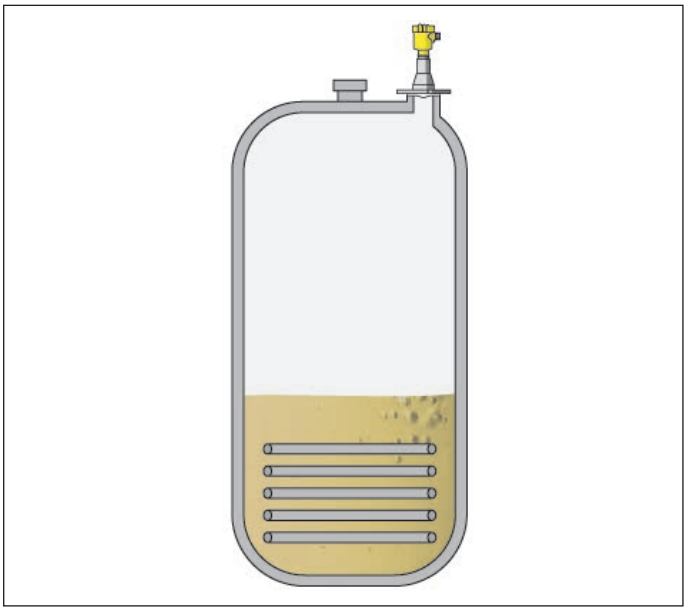

Fig. 28: Level measurement in a sugar evaporator with VEGAPULS 63

The VEGAPULS 63 radar sensor is particularly suitable for level measurement in the sugar evaporator.

The PTFE encapsulated horn antenna is protected against contamination or adhesion by the juice. The instrument is gauge and low pressure resistant, even with dynamic pressure and suctions.

Process vessels

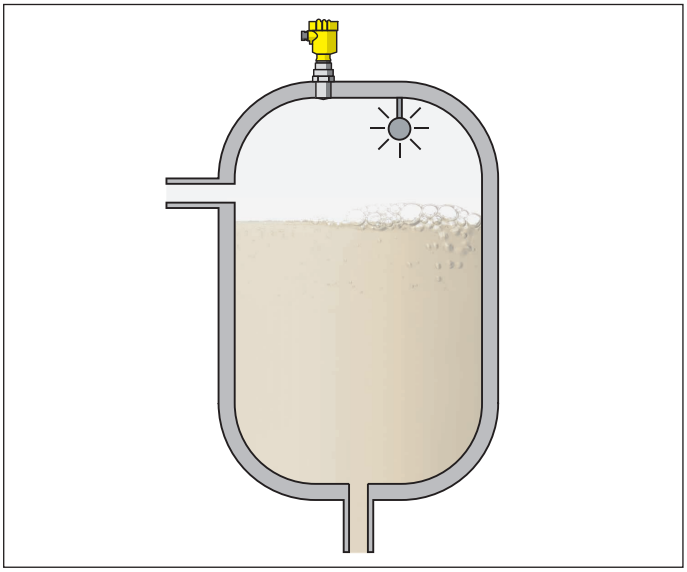

Fig. 29: Level measurement in a small process vessel with VEGAPULS 64

The strongly focussed measuring signal of VEGAPULS 64 offers considerable advantages particularly in small process vessels in the food processing industry. The sensor operates reliably even with frequently changing filling and emptying processes.

Storage tank

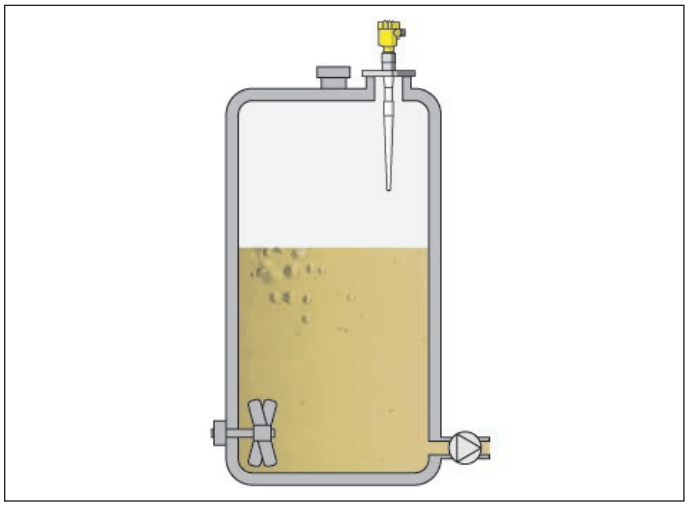

Fig. 30: Level measurement in a storage tank with VEGAPULS 65

The VEGAPULS 65 radar sensor is particularly suitable for level measurement in a storage tank.

Storage tower

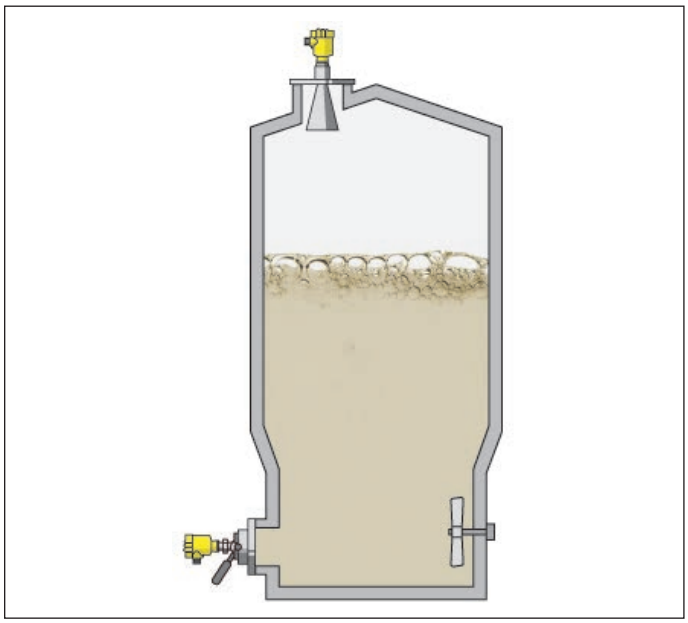

Fig. 31: Level measurement in a storage tower with VEGAPULS 65

The VEGAPULS 66 radar sensor is particularly suitable for level measurement in a storage tower for paper suspension.

With the large anntenna and the low frequency measuring system, the sensor functions even in case of steam and fluctuating surface.

8 Electronics - 4 … 20 mA/HART - two-wire

Configuration of the electronics

The plug-in electronics is mounted in the electronics compartment of the instrument and can be exchanged by the user when servicing is required. The electronics is completely encapsulated to protect against vibration and moisture.

The terminals for voltage supply as well as the contact pins with I^2C interface for parameter adjustment are located on the upper side of the electronics. In the double-chamber housing, the terminals are located in the separate terminal compartment.

Voltage supply

Power supply and current signal are carried on the same two-wire cable. The operating voltage can differ depending on the instrument version.

You can find the data of the voltage supply in chapter "*Technical data*" in the operating instructions manual of the respective instrument.

Provide a reliable separation between the supply circuit and the mains circuits according to DIN EN 61140 VDE 0140-1.

Specifications of the voltage supply:

- Operating voltage
  - 9.6 … 35 V DC
  - 12 … 35 V DC
- Permissible residual ripple - Non-Ex, Ex-ia instrument
  - for 9.6 V< U_N < 14 V: ≤ 0.7 V_{eff} (16 … 400 Hz)
  - for 18 V< U_N < 35 V: ≤ 1.0 V_{eff} (16 … 400 Hz)

Keep in mind the following additional factors that influence the operating voltage:

- Lower output voltage of the power supply unit under nominal load (e.g. with a sensor current of 20.5 mA or 22 mA in case of fault)
- Influence of additional instruments in the circuit (see load values in chapter "*Technical data*" of the operating instructions of the respective instrument)

Connection cable

The instrument is connected with standard two-wire cable without screen. If electromagnetic interference is expected which is above the test values of EN 61326-1 for industrial areas, screened cable should be used.

We generally recommend the use of screened cable for HART multidrop mode.

Cable screening and grounding

If screened cable is required, we recommend connecting the cable screen on both ends to ground potential. In the sensor, the screen must be connected directly to the internal ground terminal. The ground terminal on the outside of the housing must be connected to the ground potential (low impedance).

Connection

Single chamber housing

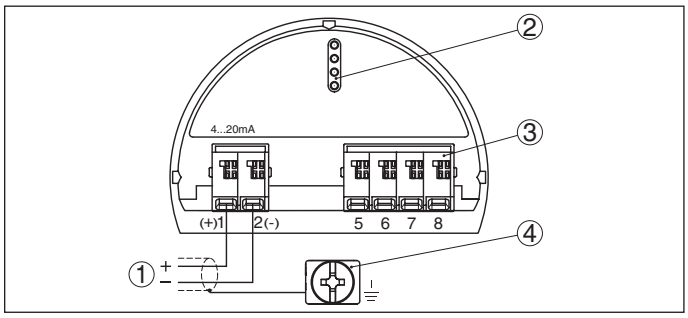

Fig. 32: Electronics and connection compartment, single chamber housing

1 Voltage supply/Signal output
2 For display and adjustment module or interface adapter
3 For external display and adjustment unit
4 Ground terminal for connection of the cable screen

Double chamber housing

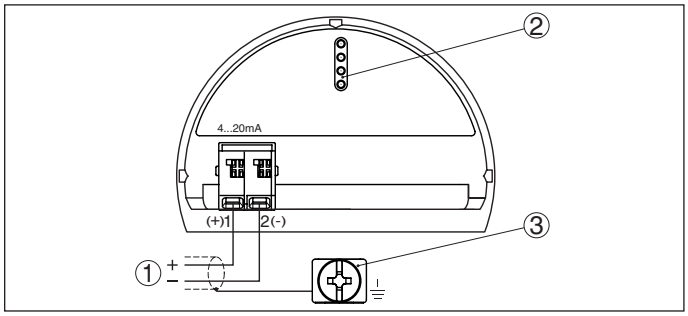

Fig. 33: Connection compartment, double chamber housing

1 Voltage supply/Signal output
2 For display and adjustment module or interface adapter
3 Ground terminal for connection of the cable screen

Wire assignment connection cable VEGAPULS WL 61

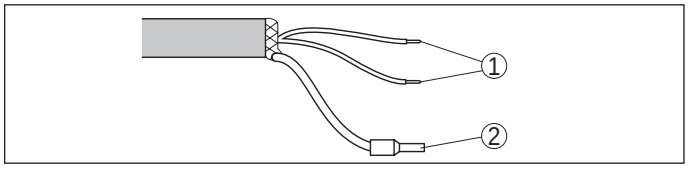

Fig. 34: Wire assignment in permanently connected connection cable

1 Brown (+) and blue (-) to power supply or to the processing system
2 Shielding

9 Electronics - 4 … 20 mA/HART - four-wire

Configuration of the electronics

The plug-in electronics is mounted in the electronics compartment of the instrument and can be exchanged by the user when servicing is required. The electronics is completely encapsulated to protect against vibration and moisture.

The contact pins with I^2C interface for parameter adjustment are located on the upper side of the electronics. The terminals for the power supply are located in the separate connection compartment.

Voltage supply

If a reliable separation is required, the power supply and the current output are transmitted over separate two-wire connection cables.

- Operating voltage with version for low voltage
  - 9.6 … 48 V DC, 20 … 42 V AC, 50/60 Hz
- Operating voltage with version for mains voltage
  - 90 … 253 V AC, 50/60 Hz

Connection cable

The 4 … 20 mA current output is connected with standard two-wire cable without screen. If electromagnetic interference is expected which is above the test values of EN 61326 for industrial areas, screened cable should be used.

For voltage supply, an approved installation cable with PE conductor is required.

Cable screening and grounding

If screened cable is required, we recommend connecting the cable screen on both ends to ground potential. In the sensor, the screen must be connected directly to the internal ground terminal. The ground terminal on the outside of the housing must be connected to the ground potential (low impedance).

Connection, double chamber housing

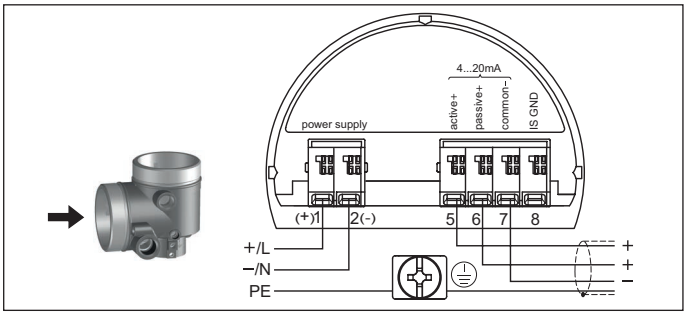

Fig. 35: Connection compartment, double chamber housing

1 Voltage supply
2 4 … 20 mA signal output active
3 4 … 20 mA signal output passive

Terminal	Function	Polarity
1	Voltage supply	+/L
2	Voltage supply	-/N
5	4 … 20 mA output (active)	+
6	4 … 20 mA output (passive)	+
7	Mass - output	-
8	Functional ground with installation according to CSA	

10 Electronics - Profibus PA

Configuration of the electronics

The plug-in electronics is mounted in the electronics compartment of the instrument and can be exchanged by the user when servicing is required. The electronics is completely encapsulated to protect against vibration and moisture.

The terminals for voltage supply as well as the plug with I^2C interface for parameter adjustment are located on the upper side of the electronics. In the double-chamber housing, these connection elements are located in the separate connection compartment.

Voltage supply

The voltage supply is provided by a Profibus DP /PA segment coupler.

Specifications of the voltage supply:

- Operating voltage
  - 9 … 32 V DC
- Max. number of sensors per DP/PA segment coupler
  - 32

Connection cable

Connection is carried out with screened cable according to Profibus specification.

Make sure that the entire installation is carried out according to the Profibus specification. In particular, make sure that the bus is terminated with suitable terminating resistors.

Cable screening and grounding

In systems with potential equalisation, connect the cable screen directly to ground potential at the power supply unit, in the connection box and at the sensor. The screen in the sensor must be connected directly to the internal ground terminal. The ground terminal outside on the housing must be connected to the potential equalisation (low impedance).

In systems without potential equalisation, connect the cable screen directly to ground potential on the power supply unit and the sensor. In the connection box or T-distributor, the screen of the short stub to the sensor may not be connected to ground potential or to another cable screen.

Connection

Single chamber housing

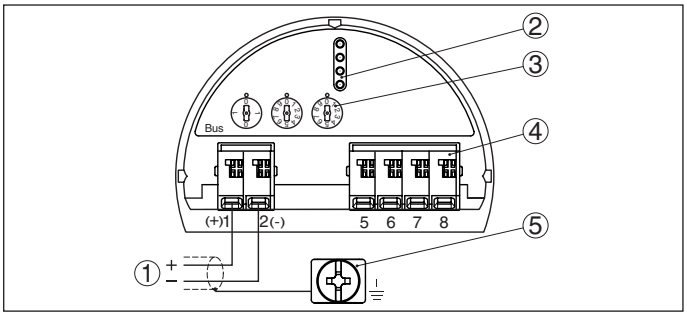

Fig. 36: Electronics and connection compartment, single chamber housing

1 *Voltage supply/Signal output*
2 *For display and adjustment module or interface adapter*
3 *Selection switch for bus address*
4 *For external display and adjustment unit*
5 *Ground terminal for connection of the cable screen*

Connection, double chamber housing

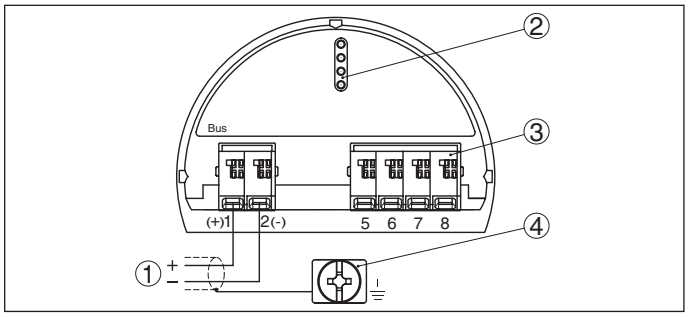

Fig. 37: Connection compartment, double chamber housing

1 *Voltage supply, signal output*
2 *For display and adjustment module or interface adapter*
3 *For external display and adjustment unit*
4 *Ground terminal for connection of the cable screen*

Wire assignment connection cable VEGAPULS WL 61

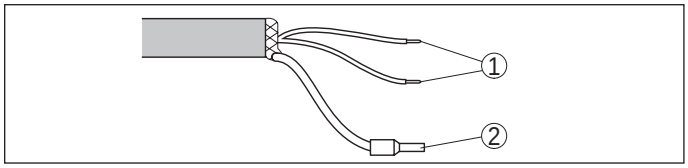

Fig. 38: Wire assignment in permanently connected connection cable

1 *Brown (+) and blue (-) to power supply or to the processing system*
2 *Shielding*

11 Electronics - Foundation Fieldbus

Configuration of the electronics

The plug-in electronics is mounted in the electronics compartment of the instrument and can be exchanged by the user when servicing is required. The electronics is completely encapsulated to protect against vibration and moisture.

The terminals for voltage supply as well as the contact pins with I^2C interface for parameter adjustment are located on the upper side of the electronics. In the double-chamber housing, the terminals are located in the separate terminal compartment.

Voltage supply

Power supply via the H1 Fieldbus cable.

Specifications of the voltage supply:

- Operating voltage
  - 9 … 32 V DC
- max. number of sensors
  - 32

Connection cable

Connection is carried out with screened cable according to Fieldbus specification.

Make sure that the entire installation is carried out according to the Fieldbus specification. In particular, make sure that the bus is terminated with suitable terminating resistors.

Cable screening and grounding

In systems with potential equalisation, connect the cable screen directly to ground potential at the power supply unit, in the connection box and at the sensor. The screen in the sensor must be connected directly to the internal ground terminal. The ground terminal outside on the housing must be connected to the potential equalisation (low impedance).

In systems without potential equalisation, connect the cable screen directly to ground potential on the power supply unit and the sensor. In the connection box or T-distributor, the screen of the short stub to the sensor may not be connected to ground potential or to another cable screen.

Connection

Single chamber housing

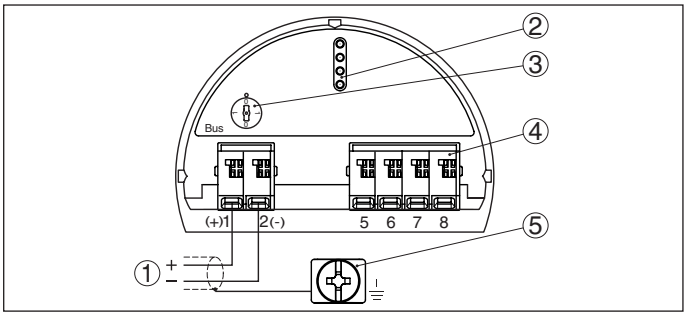

Fig. 39: Electronics and connection compartment, single chamber housing

1 *Voltage supply/Signal output*
2 *Contact pins for the display and adjustment module or interface adapter*
3 *Selection switch for bus address*
4 *For external display and adjustment unit*
5 *Ground terminal for connection of the cable screen*

Connection, double chamber housing

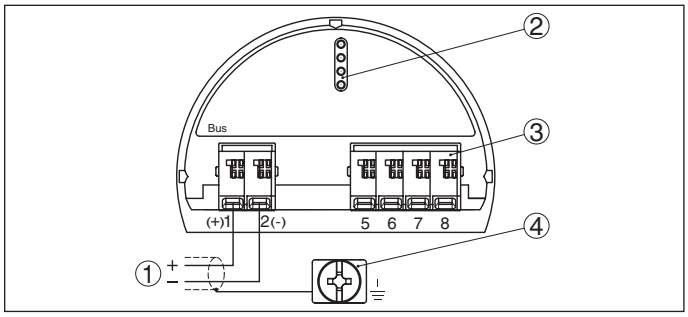

Fig. 40: Connection compartment, double chamber housing

1 *Voltage supply, signal output*
2 *For display and adjustment module or interface adapter*
3 *For external display and adjustment unit*
4 *Ground terminal for connection of the cable screen*

Wire assignment connection cable VEGAPULS WL 61

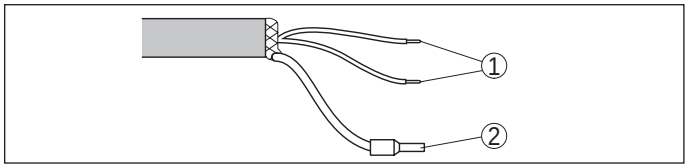

Fig. 41: Wire assignment in permanently connected connection cable

1 *Brown (+) and blue (-) to power supply or to the processing system*
2 *Shielding*

12 Electronics - Modbus, Levelmaster protocol

Configuration of the electronics

The plug-in electronics is mounted in the electronics compartment of the instrument and can be exchanged by the user when servicing is required. The electronics is completely encapsulated to protect against vibration and moisture.

The contact pins with I^2C interface for parameter adjustment are located on the upper side of the electronics. The terminals for the power supply are located in the separate connection compartment.

Voltage supply

Power supply via the Modbus host (RTU)

- Operating voltage
  - 8 … 30 V DC
- max. number of sensors
  - 32

Connection cable

The instrument is connected with standard two-wire, twisted cable suitable for RS 485. If electromagnetic interference is expected which is above the test values of EN 61326 for industrial areas, screened cable should be used.

For power supply, a separate two-wire cable is required.

Make sure that the entire installation is carried out according to the Fieldbus specification. In particular, make sure that the bus is terminated with suitable terminating resistors.

Cable screening and grounding

In systems with potential equalisation, connect the cable screen directly to ground potential at the power supply unit, in the connection box and at the sensor. The screen in the sensor must be connected directly to the internal ground terminal. The ground terminal outside on the housing must be connected to the potential equalisation (low impedance).

In systems without potential equalisation, connect the cable screen directly to ground potential on the power supply unit and the sensor. In the connection box or T-distributor, the screen of the short stub to the sensor may not be connected to ground potential or to another cable screen.

Connection

Double chamber housing

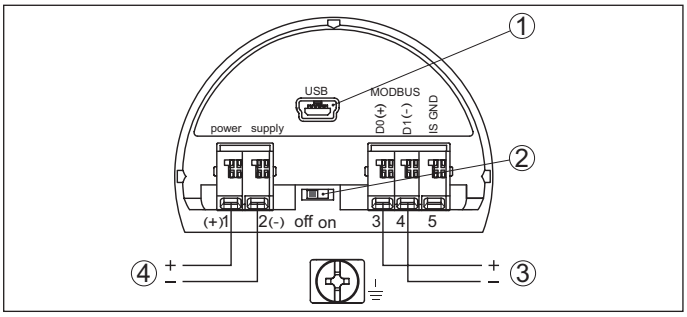

Fig. 42: Connection compartment

1 *USB interface*
2 *Slide switch for integrated termination resistor (120 Ω)*
3 *Modbus signal*
4 *Voltage supply*

13 Adjustment

13.1 Adjustment directly at the measuring point

Via the display and adjustment module through keys
The plug-in display and adjustment module is used for measured value indication, adjustment and diagnosis. It is equipped with an illuminated full dot matrix as well as four keys for adjustment.

Fig. 43: Display and adjustment module with single chamber housing

Via the display and adjustment module through magnetic pen
With the Bluetooth version of the display and adjustment module, the sensor can also be adjusted with the magnetic pen. This is done right through the closed lid (with inspection window) of the sensor housing.

Fig. 44: Display and adjustment module - with adjustment via magnetic pen

Via a PC with PACTware/DTM
The interface converter VEGACONNECT is required for connection of the PC. The converter is placed on the sensor instead of the display and adjustment module and connected to the USB interface of the PC.

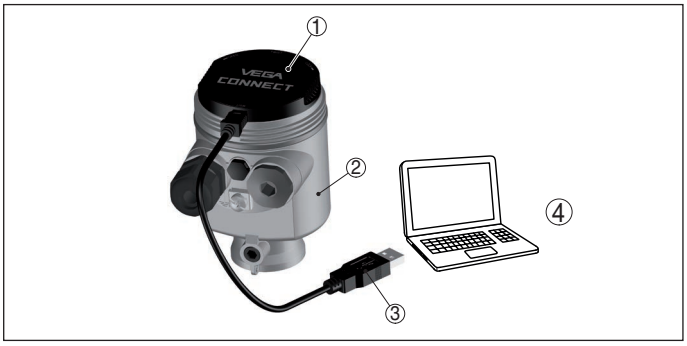

Fig. 45: Connection of the PC via VEGACONNECT and USB

1 *VEGACONNECT*
2 *Sensor*
3 *USB cable to the PC*
4 *PC with PACTware/DTM*

PACTware is an adjustment software for configuration, parameter adjustment, documentation and diagnosis of field devices. The corresponding device drivers are called DTMs.

13.2 Operation in the measurement loop environment - wireless via Bluetooth

Via a smartphone/tablet
The display and adjustment module with integrated Bluetooth functionality allows wireless connection to smartphones/tablets with iOS or Android operating system. The adjustment is carried out via the VEGA Tools app from the Apple App Store or Google Play Store.

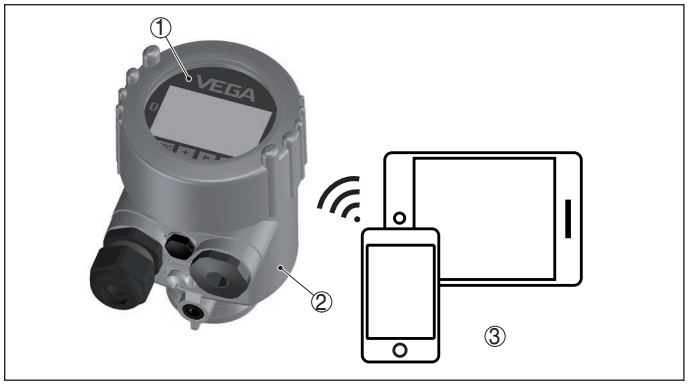

Fig. 46: Wireless connection to smartphones/tables

1 *Display and adjustment module*
2 *Sensor*
3 *Smartphone/Tablet*

Via a PC with PACTware/DTM
The wireless connection from the PC to the sensor is carried out via the Bluetooth USB adapter and a display and adjustment module with integrated Bluetooth function. The adjustment is carried out via the PC with PACtware/DTM.

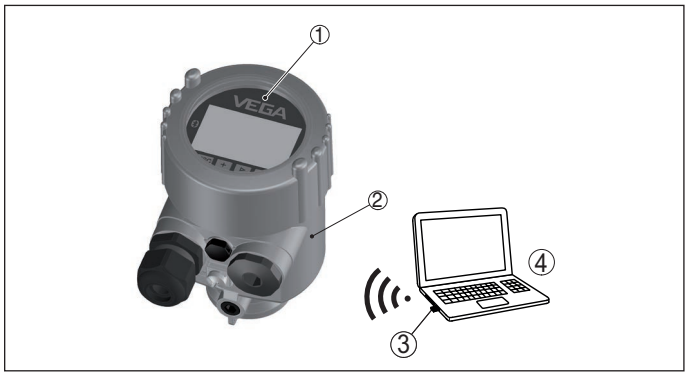

Fig. 47: Connection of the PC via Bluetooth USB adapter

1 *Display and adjustment module*
2 *Sensor*
3 *Bluetooth USB adapter*
4 *PC with PACTware/DTM*

13.3 Adjustment carried out at position remote from the measuring point - wired

Via external display and adjustment units
For this, the external display and adjustment units VEGADIS 81 and 82 are available. The adjustment is carried out via the keys of the built-in display and adjustment module.

The VEGADIS 81 is mounted at a distance of 50 m from the sensor and directly to the sensor electronics. VEGADIS 82 is looped directly into the signal cable at any point.

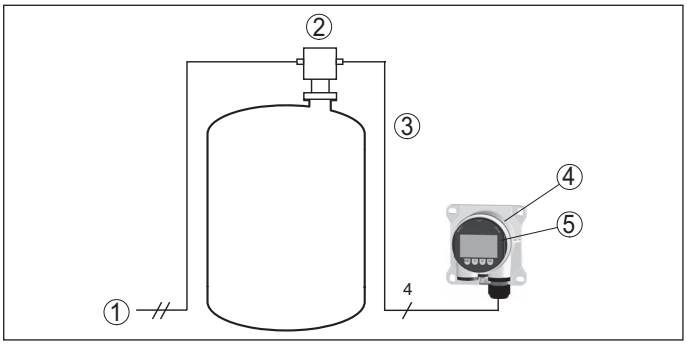

Fig. 48: Connection of VEGADIS 81 to the sensor

1 *Voltage supply/Signal output sensor*
2 *Sensor*
3 *Connection cable sensor - external display and adjustment unit*
4 *External display and adjustment unit*
5 *Display and adjustment module*

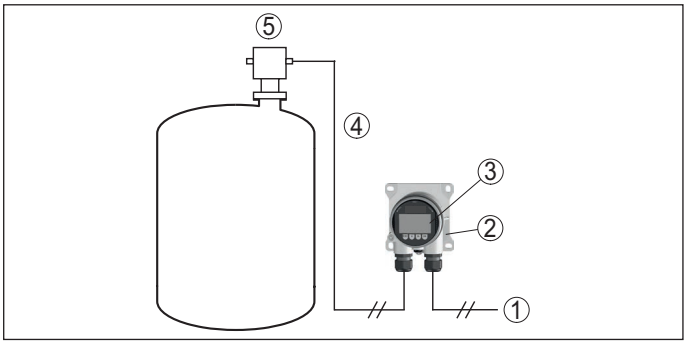

Fig. 49: Connection of VEGADIS 82 to the sensor

1 *Voltage supply/Signal output sensor*
2 *External display and adjustment unit*
3 *Display and adjustment module*
4 *4 … 20 mA/HART signal cable*
5 *Sensor*

Via a PC with PACTware/DTM
The sensor adjustment is carried out via a PC with PACTware/DTM.

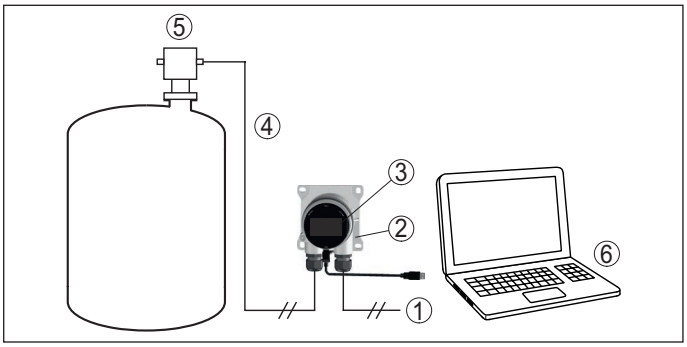

Fig. 50: Connection of VEGADIS 82 to the sensor, adjustment via PC with PACTware

1 *Voltage supply/Signal output sensor*
2 *External display and adjustment unit*
3 *VEGACONNECT*
4 *4 … 20 mA/HART signal cable*
5 *Sensor*
6 *PC with PACTware/DTM*

13.4 Adjustment carried out at position remote from the measuring point - wireless through mobile network

As an option, the radio module PLICSMOBILE can be mounted into a plics® sensor with double chamber housing. It is used for transmission of measured values and for remote parameter adjustment of the sensor.

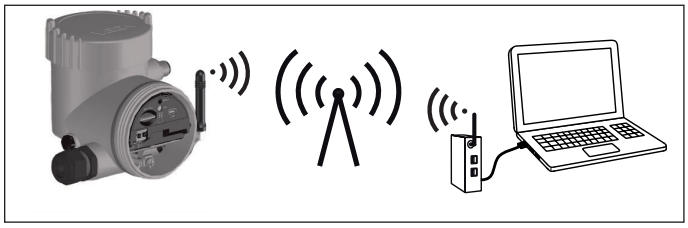

Fig. 51: Transmission of measured values and remote parameter adjustment of the sensor via mobile phone network.

13.5 Alternative adjustment programs

DD adjustment programs
Device descriptions as Enhanced Device Description (EDD) are available for DD adjustment programs such as, for example, AMS™ and PDM.

The files can be downloaded at www.vega.com/downloads under "*Software*".

Field Communicator 375, 475
Device descriptions for the instruments are available as EDD for parameterisation with Field Communicator 375 or 475.

Integrating the EDD into the Field Communicator 375 or 475 requires the "Easy Upgrade Utility" software, which is available from the manufacturer. This software is updated via the Internet and new EDDs are automatically accepted into the device catalogue of this software after they are released by the manufacturer. They can then be transferred to a Field Communicator.

14 Dimensions

Plastic housing

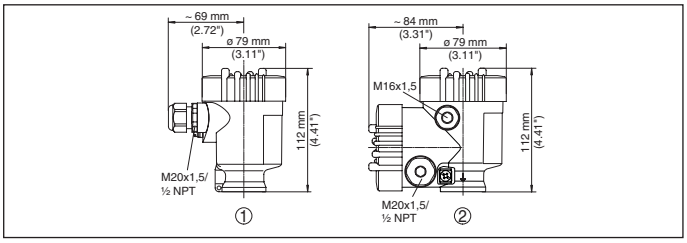

1 *Single chamber housing*
2 *Double chamber housing*

Aluminium housing

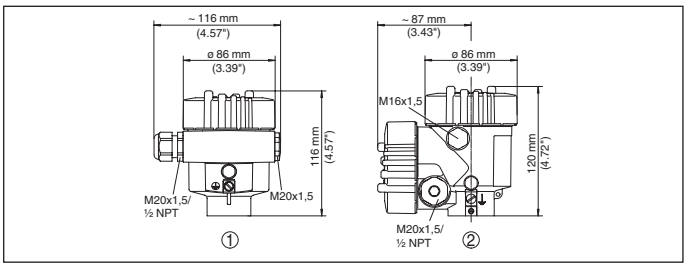

1 *Single chamber housing*
2 *Double chamber housing*

Stainless steel housing

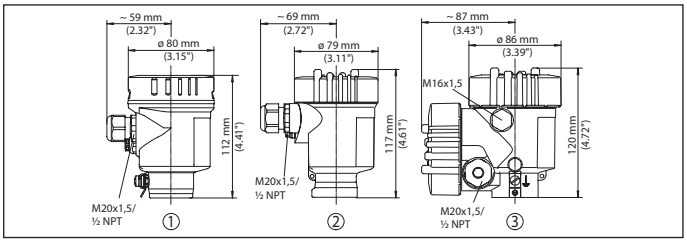

1 *Single chamber housing, electropolished*
2 *Single chamber housing, precision casting*
2 *Double chamber housing, precision casting*

VEGAPULS WL 61

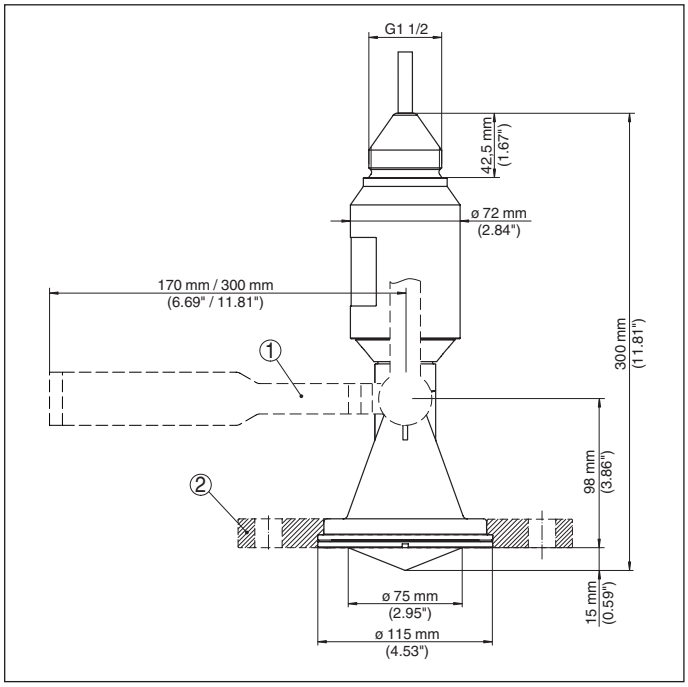

Fig. 55: Dimensions VEGAPULS

1 *Mounting strap*
2 *Combi compression flange*

VEGAPULS 61

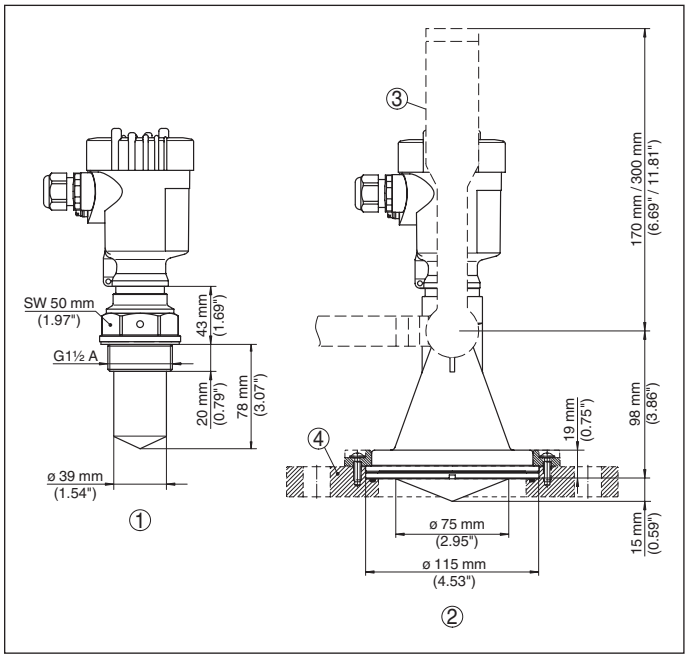

1 *Version with encapsulated antenna system (ø 40 mm)*
2 *Version with plastic horn antenna (ø 80 mm)*
3 *Mounting strap*
4 *Adapter flange*

VEGAPULS 62

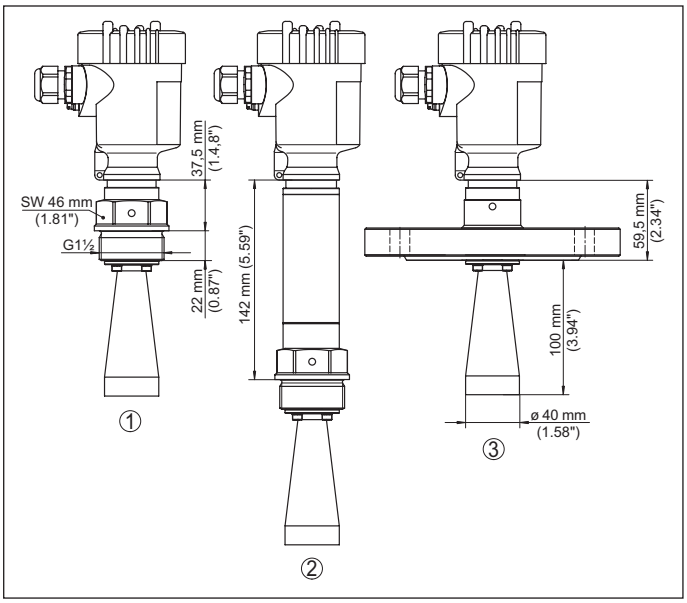

1 *Threaded version*
2 *Threaded version with temperature adapter up to 250 °C*
3 *Flange version*

VEGAPULS 63

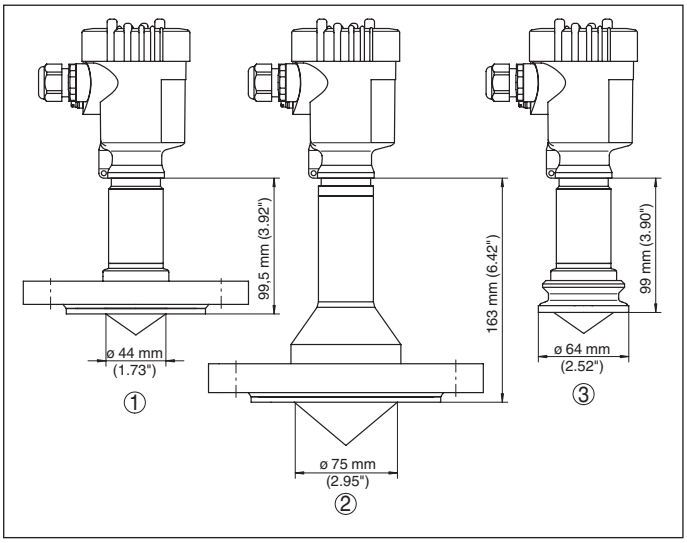

1 *Flange version DN 50*
2 *Flange version DN 80*
3 *Clamp version 2"*

VEGAPULS 64

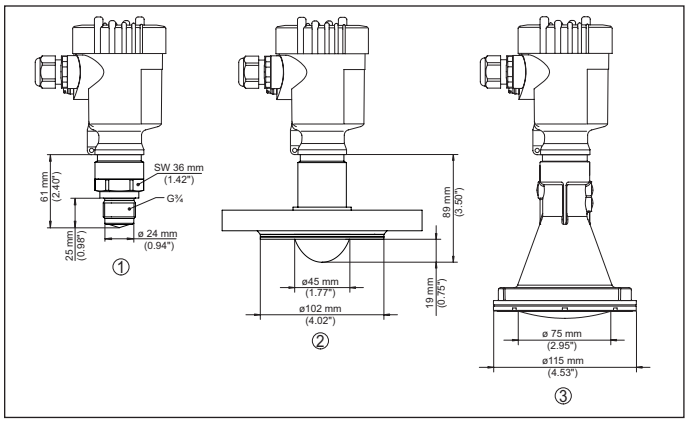

1 *Version thread with integrated horn antenna G¾*
2 *Version flange with encapsulated antenna system DN 80*
3 *Version with plastic horn antenna DN 80*

VEGAPULS 65

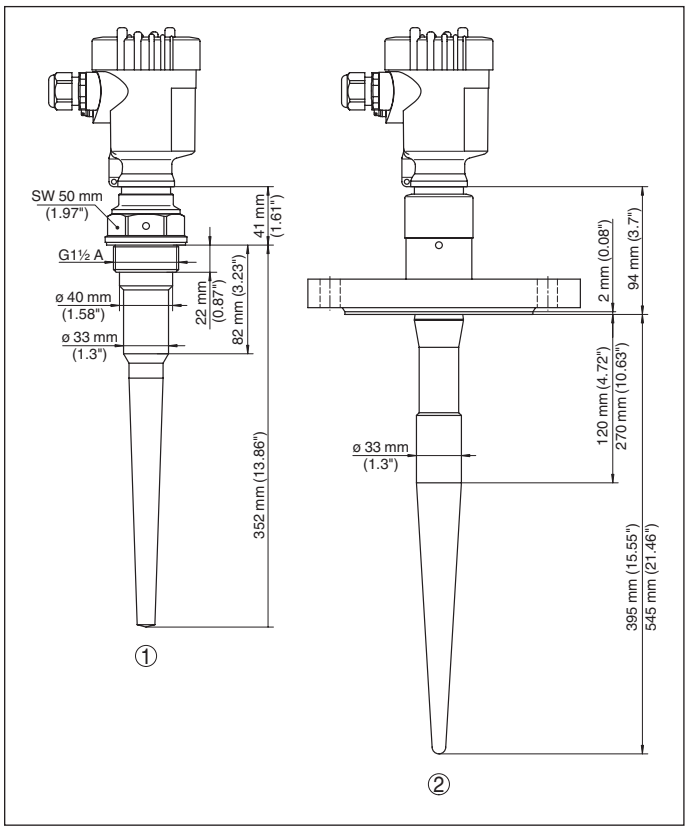

1 *Threaded version G1½*
2 *Flange version DN 80*

29019-EN-180913

VEGAPULS 66

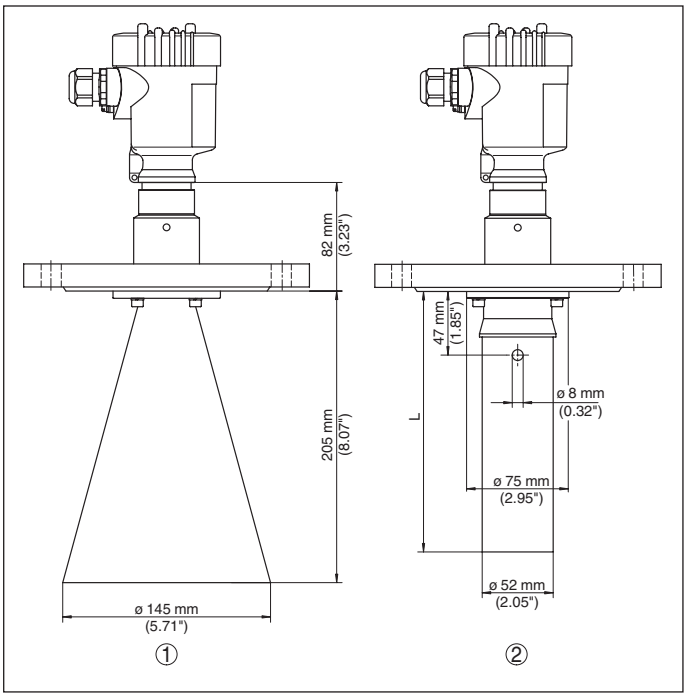

1 Version with horn antenna ø 145 mm
2 Version with standpipe antenna

The listed drawings represent only an excerpt of the available process fittings. You can find more drawings at www.vega.com/downloads under "*Drawings*".

All statements concerning scope of delivery, application, practical use and operating conditions of the sensors and processing systems correspond to the information available at the time of printing.
Subject to change without prior notice

© VEGA Grieshaber KG, Schiltach/Germany 2018

VEGA Grieshaber KG
Am Hohenstein 113
77761 Schiltach
Germany

Phone +49 7836 50-0
Fax +49 7836 50-201
E-mail: info.de@vega.com
www.vega.com

29019-EN-180913