NAPA COUNTY BUILDING DEPARTMENT

1125 THIRD STREET

NAPA, CA 94558

DEPARTMENT OF PUBLIC WORKS

JUAN ARIAS, COUNTY ENGINEER RCE# C63365

650 IMPERIAL WAY
HVAC SYSTEM UPGRADE

PROJECT PW 18-03

SHEET INDEX

TITLE

T0.00 TITLE SHEET

MECHANICAL

M0.01 ABBREVIATIONS, LEGENDS AND NOTES - MECHANICAL
M0.02 SCHEDULES - MECHANICAL

MD2.01 FIRST LEVEL DEMOLITION FLOOR PLAN HVAC - MECHANICAL
MD2.02 SECOND LEVEL DEMOLITION FLOOR PLAN HVAC - MECHANICAL
MD2.03 DEMOLITION ROOF PLAN HVAC - MECHANICAL

M2.01 FIRST LEVEL FLOOR PLAN HVAC - MECHANICAL
M2.02 SECOND LEVEL FLOOR PLAN HVAC - MECHANICAL
M2.03 ROOF PLAN HVAC - MECHANICAL

M3.01 2007 AS-BUILT TEST AND BALANCE REPORT - REFERENCE ONLY - MECHANICAL
M3.02 2007 AS-BUILT TEST AND BALANCE REPORT - REFERENCE ONLY - MECHANICAL
M3.03 2007 AS-BUILT TEST AND BALANCE REPORT - REFERENCE ONLY - MECHANICAL
M3.04 2007 AS-BUILT TEST AND BALANCE REPORT - REFERENCE ONLY - MECHANICAL

M6.01 DIAGRAMS - MECHANCIAL

M7.01 DETAILS - MECHANICAL

BE1.01 BUILDING ENERGY ANALYSIS
BE1.02 BUILDING ENERGY ANALYSIS

PLUMBING

P0.01 ABBREVIATIONS, LEGENDS AND NOTES PLUMBING

P2.03 WASTE - ROOF PLAN - PLUMBING

P3.03 GAS - ROOF PLAN - PLUMBING

P7.01 DETAILS - PLUMBING

ELECTRICAL

E0.01 ABBREVIATIONS, LEGENDS, & NOTES - ELECTRICAL

E3.01 FIRST FLOOR PLAN - ELECTRICAL - POWER
E3.02 SECOND FLOOR PLAN - ELECTRICAL - POWER
E3.03 ROOF PLAN - ELECTRICAL - POWER

E5.01 SINGLE LINE DIAGRAM AND SCHEDULES - ELECTRICAL

E7.01 DETAILS - ELECTRICAL

GENERAL NOTES

1. CONTRACTOR AGREES TO ASSUME SOLE AND COMPLETE RESPONSIBILITY FOR THE JOB SITE DURING THE COURSE OF CONSTRUCTION OF THIS PROJECT, INCLUDING SAFETY OF ALL PERSONS AND PROPERTY; THAT THIS REQUIREMENT SHALL APPLY CONTINUOUSLY AND NOT BE LIMITED TO NORMAL WORKING HOURS; AND THAT THE CONTRACTOR SHALL DEFEND, INDEMNIFY, AND HOLD THE COUNTY AND ITS REPRESENTATIVES HARMLESS FROM ANY AND ALL LIABILITY, REAL AND/OR ALLEGED, IN CONJUNCTION WITH THE PERFORMANCE OF THIS PROJECT.
2. CONTRACTOR SHALL BE HELD RESPONSIBLE FOR ANY AND ALL DAMAGES TO EXISTING STRUCTURES AND UTILITIES DURING CONSTRUCTION.
3. CONTRACTOR SHALL VERIFY LOCATIONS, LEVELS, DISTANCES, AND FEATURES THAT MAY AFFECT THE WORK. SHOULD EXISTING CONDITIONS DIFFER FROM THOSE SHOWN OR INDICATED, OR IF IT APPEARS THAT THESE PLANS, STANDARD SPECIFICATIONS, AND SPECIAL PROVISIONS DO NOT ADEQUATELY DETAIL THE WORK TO BE DONE, CONTRACTOR SHALL NOTIFY THE ENGINEER PRIOR TO CONTINUING WITH ANY RELATED WORK. NO ALLOWANCE WILL BE MADE IN HIS BEHALF FOR ANY EXTRA EXPENSE RESULTING FROM FAILURE OR NEGLECT IN DETERMINING THE CONDITIONS UNDER WHICH WORK IS TO BE PERFORMED. NOTED DIMENSIONS TAKE PRECEDENCE OVER SCALE.
4. A SET OF SIGNED WORKING DRAWINGS AND A SET OF SPECIFICATIONS WILL BE KEPT AT ALL TIMES AT THE JOB SITE ON WHICH ALL CHANGES OR VARIATIONS IN THE WORK, INCLUDING ALL EXISTING UTILITIES, ARE TO BE RECORDED AND/OR CORRECTED DAILY AND SUBMITTED TO THE COUNTY ENGINEER WHEN THE WORK TO BE DONE IS COMPLETED.
5. CONTRACTOR SHALL PROVIDE AND MAINTAIN SUFFICIENT TEMPORARY BARRIERS TO PROVIDE FOR THE SAFETY OF THE STAFF AND PUBLIC TO THE SATISFACTION OF THE PUBLIC WORKS DIRECTOR AND BUILDING STAFF.
6. CONTRACTOR SHALL CONTACT THE COUNTY'S DIRECTOR OF PUBLIC WORKS, OR HIS/HER DESIGNEE, TO ARRANGE A PRE-CONFERENCE FOR THE PURPOSE OF REVIEWING JOB REQUIREMENTS AND COUNTY PROCEDURES.
7. ALL MATERIALS SHALL BE FURNISHED AND INSTALLED BY THE CONTRACTOR UNLESS OTHERWISE NOTED.
8. CONTRACTOR SHALL COOPERATE WITH ALL NECESSARY STAFF RELOCATIONS, IF REQUIRED, TO FACILITATE MAKING AREAS READY FOR WORK.
9. CONTRACTOR SHALL NOTIFY THE DIRECTOR OF PUBLIC WORKS AT LEAST 72 HOURS IN ADVANCE OF COMMENCEMENT OF ANY PART OF THE WORK.
10. CONTRACTOR SHALL COORDINATE CONSTRUCTION SCHEDULE WITH ENGINEER TO MINIMIZE IMPACT TO RESIDENTS.
11. CONTRACTOR IS RESPONSIBLE FOR PROCURING AND PAYING FOR ANY BUILDING, ENCROACHMENT AND OR TRANSPORTATION PERMITS.
12. CONTRACTOR SHALL WORK ON THE WEEKEND ONLY IF REQUIRED BY ANY PERMITS.

APPLICABLE CODES AND STANDARDS

ALL WORK SHALL COMPLY WITH FOLLOWING CODES AND REGULATIONS

2019 BUILDING STANDARDS ADMINISTRATIVE CODE, PART 1, TITLE 24 C.C.R.
2019 CALIFORNIA BUILDING CODE (CBC), PART 2, TITLE 24 C.C.R.
(2015 INTERNATIONAL BUILDING CODE AND 2019 CALIFORNIA AMENDMENTS)
2019 CALIFORNIA ELECTRICAL CODE (CEC), PART 3, TITLE 24 C.C.R.
(2014 NATIONAL ELECTRICAL CODE AND 2019 CALIFORNIA AMENDMENTS)
2019 CALIFORNIA MECHANICAL CODE (CMC), PART 4, TITLE 24 C.C.R.
(2015 UNIFORM MECHANICAL CODE AND 2019 CALIFORNIA AMENDMENTS)
2019 CALIFORNIA PLUMBING CODE (CPC), PART 5, TITLE 24 C.C.R.
(2015 UNIFORM PLUMBING CODE AND 2019 CALIFORNIA AMENDMENTS)
2019 CALIFORNIA ENERGY CODE (CEC), PART 6, TITLE 24 C.C.R.
2019 CALIFORNIA FIRE CODE, PART 9, TITLE 24 C.C.R.
(2015 INTERNATIONAL FIRE CODE AND 2019 CALIFORNIA AMENDMENTS)
2019 CALIFORNIA GREEN BUILDING STANDARDS CODE (CAL GREEN), PART 11, TITLE 24 C.C.R.
2019 CALIFORNIA REFERENCED STANDARDS, PART 12, TITLE 24 C.C.R.
TITLE 19 C.C.R., PUBLIC SAFETY, STATE FIRE MARSHAL REGULATIONS - LATEST EDITION

2019 NFPA 72 NATIONAL FIRE ALARM CODE W/ CA AMENDMENTS

REFERENCE CODE SECTION FOR NFPA STANDARDS ARE IN 2019 CBC CHAPTER 35, OR 2019 CFC CHAPTER 80. SEE CHAPTER 35 FOR STATE OF CALIFORNIA AMENDMENTS TO NFPA STANDARDS.

SCOPE OF WORK

BASE BID:
A. UPGRADE OF HVAC SYSTEMS SERVING FIRST AND SECOND FLOORS EAST SIDE, INCLUDES THE FOLLOWING EQUIPMENT & THE ASSOCIATED CONTROLS, DUCTWORK, PIPING, SUPPORTS, & ACCESSORIES:
A.1. DEMOLITION - (E) AC-3, (E) VAV 1-6, (E) VAV 1-8, (E) VAV 1-10, (E) VAV 1-11, (E) VAV 2-11, VAV 2-12, (E) VAV 2-13, & (E) VAV 2-17
A.2. ROOF - AC-3
A.3. CONTROLLERS ON ROOF - AC-1, AC-2, AC-3, HU-1, HU-2, & HU-3
A.4. FIRST AND SECOND FLOORS - VAV 1-6, VAV 1-8, VAV 1-10, VAV 1-11, VAV 2-11, VAV 2-12, VAV 2-13, & VAV 2-17
B. ENERGY MANAGEMENT SYSTEM TO BE SIEMENS APOGEE CONTROLS SYSTEM TO MATCH THE BUILDING'S EXISTING SYSTEM. CONTACT ANDREW JENSEN FOR DETAIL (916) 769-3207.

BID ALTERNATE 1:
C. REPLACEMENT "IN-KIND" OF EXISTING ROOFTOP HEATING UNITS, INCLUDES THE FOLLOWING EQUIPMENT & THE ASSOCIATED CONTROLS, DUCTWORK, PIPING, SUPPORTS, & ACCESSORIES:
C.1. DEMOLITION - (E) HU-1, (E) HU-2, & (E) HU-3
C.2. ROOF - HU-1, HU-2, & HU-3
D. ENERGY MANAGEMENT SYSTEM TO BE SIEMENS APOGEE CONTROLS SYSTEM TO MATCH THE BUILDING'S EXISTING SYSTEM. CONTACT ANDREW JENSEN FOR DETAIL (916) 769-3207.

LOCATION

VICINITY MAP

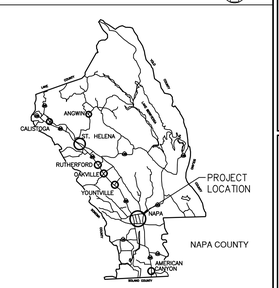

AREA MAP

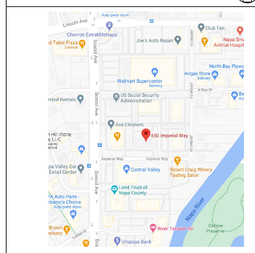

LOCATION MAP

CONTACT INFO.

OWNER	OWNER CONSULTANT (CONTROLS)	PRIME	MECHANICAL + PLUMBING	ELECTRICAL
Napa County Public Works	Siemens Industry, Inc.	MK2 Engineers	MK2 Engineers	MK2 Engineers
1195 Third Street Suite 101 Napa, CA 94559 Phone: (707)259-8376 Email: liang.su@countyofnapa.org	2969 Prospect Park Drive Suite 100 Rancho Cordova, CA 95670 Phone: (707)759-5260 Email: andrew.jensen@siemens.com	Green Valley Executive Center 5030 Business Center Drive Suite 150 Fairfield, CA 94534 Phone: (707)759-5260 Email: mkiani@mk2eng.com	Green Valley Executive Center 5030 Business Center Drive Suite 150 Fairfield, CA 94534 Phone: (707)759-5260 Email: mkiani@mk2eng.com	Green Valley Executive Center 5030 Business Center Drive Suite 150 Fairfield, CA 94534 Phone: (707)759-5260 Email: tdordea@mk2eng.com
Liang Chin Su	Andrew Jensen	Mike Kiani, PE	Mike Kiani, PE	Toma Dordea, PE

A Tradition of Stewardship
A Commitment to Service

MK2 ENGINEERS

Green Valley Executive Center
5030 Business Center Drive,
Suite 150
Fairfield, CA 94534
(707) 759-5260
www.mk2eng.com

THE DRAWINGS, PLANS, SPECIFICATIONS, ELECTRONIC DATABASE AND OTHER INSTRUMENTS OF PROFESSIONAL SERVICE PREPARED BY OR ON BEHALF OF CONSULTANT SHALL BECOME THE PROPERTY OF THE OWNER UPON PAYMENT FOR SUCH WORK. THESE DRAWINGS HAVE BEEN PREPARED SPECIFICALLY FOR THIS PROJECT AND SHALL NOT BE USED FOR ANY OTHER PROJECT, BY ANY OTHER ENTITY OR IN ANY OTHER LOCATION.

811 Know what's below. Call before you dig.

CALL 811 TWO FULL BUSINESS DAYS, MAXIMUM 14 CALENDAR DAYS, BEFORE DIGGING.

No.:	Revision:	Date:
	650 IMPERIAL WAY BID SET	2020-09-24

NAPA COUNTY PUBLIC WORKS

PROJECT:
650 IMPERIAL WAY - HVAC SYSTEM UPGRADE PROJECT PW 18-03

650 IMPERIAL WAY
NAPA, CA 94559

650 IMPERIAL WAY HVAC SYSTEM UPGRADE PW 18-03 BID SET - 2020/09/24

SHEET CONTENTS:

TITLE SHEET

BID SET

PROJECT DATE:	2020/02/05
SCALE:	NONE
SHEET ISSUED DATE:	2020/09/24
APPROVED BY:	MK
DESIGN BY:	MK/SC
DRAWN BY:	DC/JH/AJ
CHECKED BY:	MK/SC
PROJECT NO.:	PW 18-03 / 20003.00

SHEET NO.:

T0.00

P:\2020\20003 - 650 IMPERIAL WAY - HVAC\DRAW\MK2-FILES\20003 - T0-00.DWG - PLOTTED BY DAVID COLEMAN

MECHANICAL ABBREVIATIONS

AD	AREA DRAIN	IN	INCHES
AFUE	ANNUAL FUEL UTILIZATION EFFICIENCY	JT	JOINT OF DUCT
AMB	AMBIENT	LBS	POUNDS
ARCH	ARCHITECT	MAX	MAXIMUM
BD	BOARD	MBH	1000 BTUH
BEL	BELOW	MCA	MINIMUM CIRCUIT AMPS
CFH	CUBIC FEET PER HOUR	MVD	MANUAL VOLUME DAMPER
CI	CAST IRON	MECH	MECHANICAL
CLG	CEILING	MFR	MANUFACTURER
CONC	CONCRETE	MIN	MINIMUM
CONN	CONNECTION	(N)	NEW
CONT	CONTINUED	NC	NORMALLY CLOSED
COORD	COORDINATE/COORDINATION	NIC	NOT IN CONTRACT
COP	COEFFICIENT OF PERFORMANCE	NO	NORMALLY OPEN
MOCP	MAXIMUM OVERCURRENT PROTECTION	NOM	NOMINAL
DB	DRY BULB	OA	OUTSIDE AIR
WB	WET BULB	PH	ELECTRICAL PHASE
DIA	DIAMETER	PSI	POUNDS PER SQUARE INCH
DN	DOWN	RA	RETURN AIR
DWGS	DRAWINGS	RD	ROOF DRAIN
(E)	EXISTING	REQ'S	REQUIREMENTS
EA	EXHAUST AIR	RLA	RUNNING LOAD AMPS
ELECT	ELECTRICAL	RM	ROOM
ELEV	ELEVATION	SA	SUPPLY AIR
FC	FAN COIL	SM	SHEET METAL
FFE	FINISH FLOOR ELEVATION	SS	STAINLESS STEEL
FLA	FULL LOAD AMPS	STRUCT	STRUCTURAL/STRUCTURE
FLR	FLOOR	T&PRV	TEMPERATURE & PRESSURE RELIEF VALVE
GA	GAUGE	TYP	TYPICAL
GALV	GALVANIZED	UL	UNDERWRITER'S LABORATORIES
GPM	GALLONS PER MINUTE	UON	UNLESS OTHERWISE NOTED
GYP	GYPSUM	VTR	VENT THROUGH ROOF
HG	HOT GAS	W/	WITH
HP	HORSEPOWER	WG	WATER GAUGE
HP	HEAT PUMP	WH	WATER HEATER
HVAC	HEATING, VENTILATING AND	GV	GRAVITY VENTILATION
AC	AIR CONDITIONING.	EER	ENERGY EFFICIENCY RATIO
ID	INSIDE DIAMETER	ESP	EXTERNAL STATIC PRESSURE
CF	CARBON FILTER	RPM	REVOLUTION PER MINUTE
DH	DEHUMIDIFIER	HD	HOT DUCT
CDM	CONSTRUCTION DESIGN AND MANAGEMENT	CD	COLD DUCT

MECHANICAL SYMBOLS & LEGEND

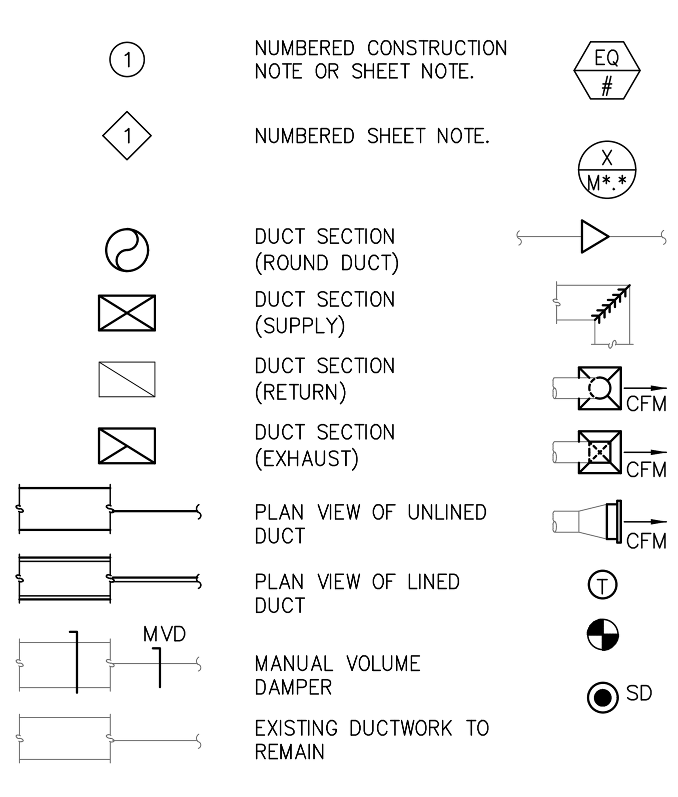

- NUMBERED CONSTRUCTION NOTE OR SHEET NOTE.
- NUMBERED SHEET NOTE.
- DUCT SECTION (ROUND DUCT)
- DUCT SECTION (SUPPLY)
- DUCT SECTION (RETURN)
- DUCT SECTION (EXHAUST)
- PLAN VIEW OF UNLINED DUCT
- PLAN VIEW OF LINED DUCT
- MANUAL VOLUME DAMPER
- EXISTING DUCTWORK TO REMAIN
- EQUIPMENT DESIGNATION: EQ = TYPE ABBREVIATION # = SEQUENTIAL NUMBER
- DETAIL CALL OUT: X = DETAIL NUMBER M*.* = SHEET NUMBER
- REDUCER FITTING
- ELBOW WITH TURNING VANES
- SUPPLY DIFFUSER, CEILING TYPE (ROUND NECK)
- SUPPLY DIFFUSER, CEILING TYPE (SQUARE NECK)
- SUPPLY DIFFUSER, SIDEWALL TYPE
- THERMOSTAT @ 44" A.F.F.
- POINT OF CONNECTION
- DUCT MOUNTED SMOKE DETECTOR. INSTALLED BY DIV.23 WIRING BY DIV. 26

SUPPLEMENTAL MECHANICAL NOTES

1. SUBMISSION OF BID IN CONNECTION WITH THIS WORK SHALL IMPLY THAT THE BIDDER HAS EXAMINED THE JOB SITE UNDER WHICH THE CONTRACTOR WILL BE OBLIGATED TO OPERATE UNDER THIS CONTRACT. NO EXTRA CHARGE WILL BE ALLOWED FOR FAILURE OF ANY BIDDER TO EXAMINE THE SITE PRIOR TO BID.
2. IN THE EVENT OF A CONFLICT OR INCONSISTENCY BETWEEN ITEMS INDICATED ON DESIGN PLANS / SPECIFICATIONS WITH CODE REQUIREMENTS, THE MORE STRINGENT STANDARD SHALL PREVAIL
3. CONTRACTOR SHALL FURNISH LABOR, MATERIALS, EQUIPMENT, AND TRANSPORTATION AS REQUIRED TO PROPERLY INSTALL ALL NEW HVAC SYSTEMS OR RELATED COMPONENTS AS INDICATED ON PLANS AND SPECIFIED HEREIN.
4. ALL NEW EQUIPMENT AND MATERIAL TO BE INSTALLED AS PART OF RENOVATION / NEW CONSTRUCTION SHALL BEAR AN UNDERWRITERS LABORATORIES LABEL (UL), AND INSTALLED IN SUCH A MANNER FOR WHICH THEY ARE DESIGNED AND APPROVED.
5. CONTRACTOR SHALL DOCUMENT AND RELAY ANY MAJOR DEVIATIONS FROM THE DESIGN DOCUMENTS, AND ATTAIN APPROVAL FROM THE MECHANICAL ENGINEER BEFORE PROCEEDING. AS-BUILT COPIES SHALL BE PROVIDED INDICATING ALL CHANGES /DEVIATIONS MADE DURING CONSTRUCTION. CONTRACTOR SHALL PROVIDE COMPLETED AS-BUILT DRAWINGS IN THE LATEST VERSION OF AUTOCAD.
6. ALL WORK SHALL BE PERFORMED IN A CLEAN AND WORKMANSHIP-LIKE MANNER. CARE SHALL BE EXERCISED TO MINIMIZE ANY INCONVENIENCE OR DISTURBANCE TO OTHER AREAS OF THE BUILDING WHICH ARE TO REMAIN IN OPERATION. ISOLATE WORK AREA BY MEANS TO KEEP DUST AND DIRT WITHIN THE CONSTRUCTION AREA.
7. THE ARRANGEMENT OF EQUIPMENT AND PIPING SHOWN ON THE DRAWINGS IS BASED UPON INFORMATION AVAILABLE TO THE ENGINEER AT THE TIME OF DESIGN AND IS NOT INTENDED TO SHOW EXACT DIMENSIONS PECULIAR TO SPECIFIC MANUFACTURER. THE DRAWINGS ARE, IN PART, DIAGRAMMATIC AND SOME FEATURES OF THE ILLUSTRATED EQUIPMENT INSTALLATION MAY REQUIRE REVISION TO MEET ACTUAL EQUIPMENT INSTALLATION REQUIREMENTS. STRUCTURAL SUPPORTS, FOUNDATIONS, CONNECTED PIPING, VALVES, PIPE SUPPORTS AND ELECTRICAL CONDUIT SPECIFIED MAY HAVE TO BE ALTERED OR ADDITIONAL ITEMS REQUIRED ACCOMMODATING THE EQUIPMENT PROVIDED. NO ADDITIONAL PAYMENT WILL BE MADE FOR SUCH REVISIONS, ALTERATIONS AND/OR ADDITIONS.
8. CONTRACTOR SHALL VERIFY ALL DIMENSIONS AT THE SITE MAKING FIELD MEASUREMENTS AND SHOP DRAWINGS NECESSARY FOR FABRICATION OR ERECTION OF HVAC AND PIPING SYSTEMS. MAKE ALLOWANCE FOR BEAMS, PIPES AND OTHER OBSTRUCTIONS IN BUILDING CONSTRUCTION.
9. CHECK DRAWINGS SHOWING WORK OF OTHER TRADE AND CONSULT WITH THE OWNER'S REPRESENTATIVE IN THE EVENT OF POTENTIAL INTERFERENCE, SHOP DRAWINGS SHALL BE MINIMUM ¬""=1'-0"" SCALE, INDICATING FITTINGS, SIZES, WELD AND CONFIGURATION AND SUBMITTED TO ENGINEER FOR REVIEW.
10. CONTRACTOR SHALL COORDINATE HIS WORK WITH ALL OTHER TRADES PRIOR TO FABRICATION, PURCHASE AND/OR INSTALLATION OF ALL WORK.
11. BEFORE COMMENCEMENT OF WORK, CONTRACTOR SHALL VERIFY THE EXACT LOCATIONS, ELEVATIONS, AND CHARACTERISTICS OF ALL UTILITIES.
12. CONTRACTOR SHALL PROVIDE ALL NECESSARY SUPPORTS FOR FIXTURES, DUCTWORK, PIPING, AND MECHANICAL EQUIPMENT, IN ORDER TO COMPLY WITH SEISMIC REQUIREMENT AS OUTLINED BY THE LATEST EDITION(S) OF THE CALIFORNIA BUILDING CODE, SMACNA INSTALLATION STANDARDS, AND ALL RELATED LOCAL ORDINANCES.

DUCTWORK SYMBOLS

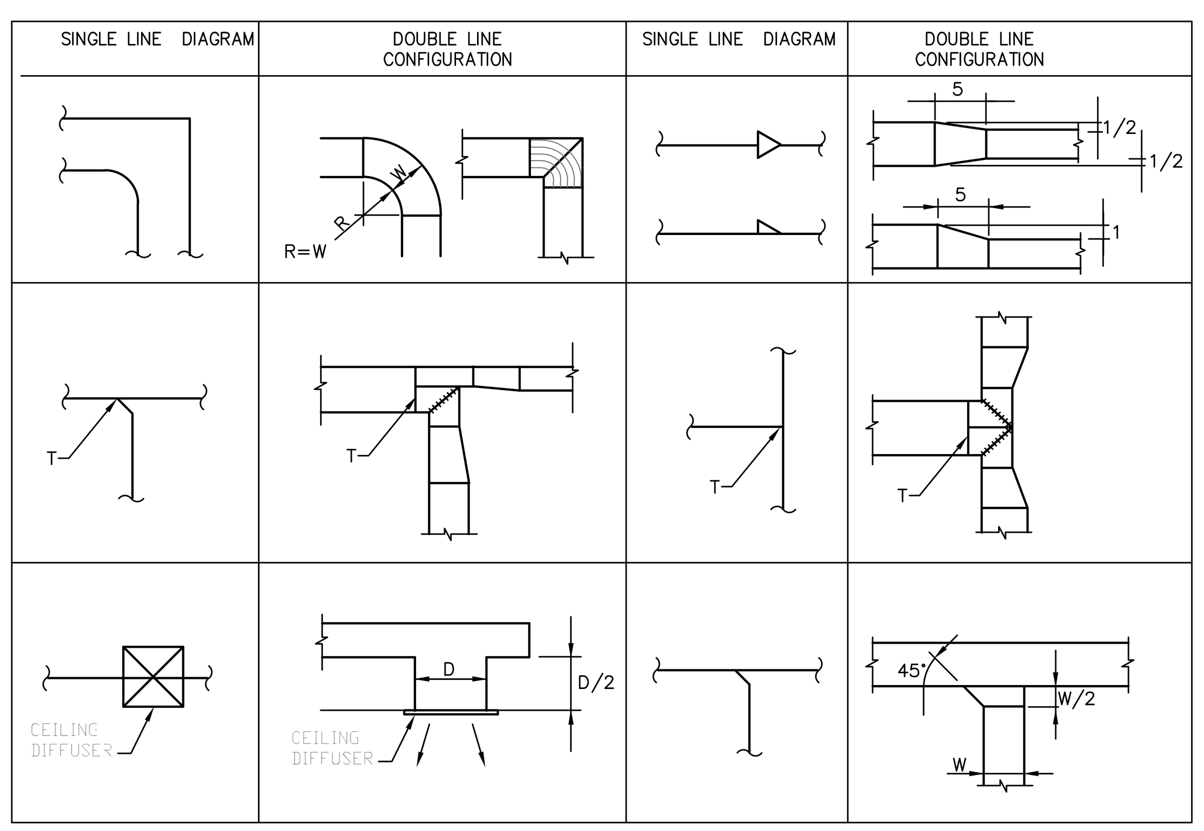

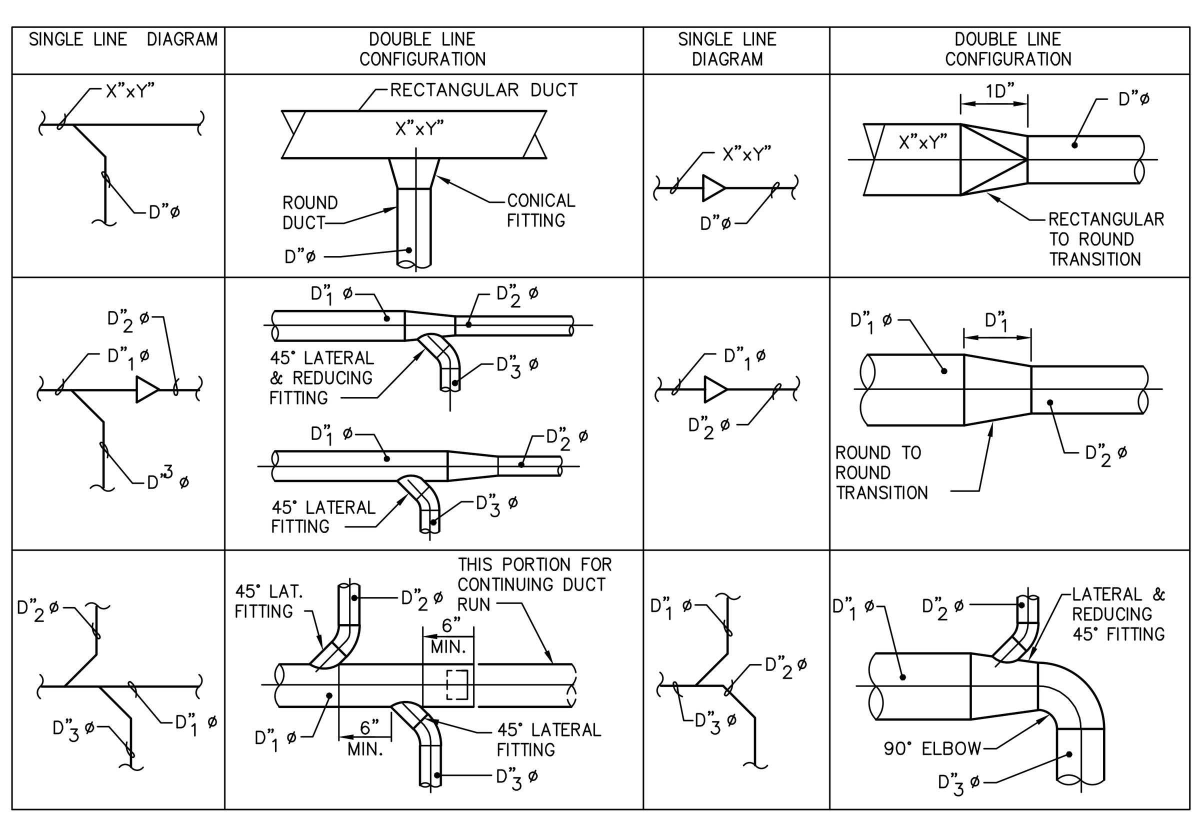

DUCT BRACING NOTES

FOR ALL DETAIL NOTES, SCHEDULES AND REQUIREMENT TO SCALE FOR BRACING DUCTS REFER TO SMACNA "SEISMIC RESTRAINT MANUAL GUIDELINES FOR MECHANICAL SYSTEMS" FIRST EDITION 1991. ALL BRACING MUST CONFORM TO SEISMIC HAZARD LEVEL (SHL) A AND CONNECTION LEVEL 3.

THE DETAILS AND REQUIREMENT TO SCALE HERE-IN ARE INTENDED AS REFERENCE GUIDELINES. THE CONTRACTOR MAY USE ANY OSHPD PRE-APPROVED METHOD FOR BRACING DUCTS.

1. BRACE RECTANGULAR DUCTS WITH CROSS SECTIONAL AREAS OF 6 SQUARE FEET AND LARGER. BRACE FLAT OVAL DUCTS IN THE SAME MANNER AS RECTANGULAR DUCTS. BRACE ROUND DUCTS WITH DIAMETERS OF 28 INCHES AND LARGER. BRACE FLAT OVAL DUCTS THE SAME AS RECTANGULAR DUCTS OF THE SAME NOMINAL SIZE.
2. EXCEPTION: NO BRACING IS REQUIRED IF THE DUCT IS SUSPENDED BY HANGERS 12 INCHES OR LESS IN LENGTH, AS MEASURED FROM THE TOP OF THE DUCT TO THE BOTTOM OF THE SUPPORT WHERE THE HANGER IS ATTACHED. HANGERS MUST BE POSITIVELY ATTACHED TO THE DUCT WITHIN 2 INCHES OF THE TOP OF THE DUCT WITH A MINIMUM OF TWO #10 SHEET METAL SCREWS.
3. TRANSVERSE BRACING SHALL OCCUR AT THE INTERVAL SPECIFIED IN THE TABLES IN CHAPTERS 5, 6, AND 7, OR AT BOTH ENDS IF THE DUCT RUN IS LESS THAN THE SPECIFIED INTERVAL. TRANSVERSE BRACING SHALL BE INSTALLED AT EACH DUCT AND AT EACH END OF A DUCT RUN, WITH A MINIMUM OF ONE BRACE AT EACH END.
4. LONGITUDINAL BRACING SHALL OCCUR AT THE INTERVAL SPECIFIED IN THE TABLES IN CHAPTERS 5, 6, AND 7, WITH AT LEAST ONE BRACE PER DUCT RUN. TRANSVERSE BRACING FOR ONE DUCT SECTION MAY ALSO ACT AS LONGITUDINAL BRACING FOR A DUCT SECTION CONNECTED PERPENDICULAR TO IT IF THE BRACING IS INSTALLED WITHIN FOUR FEET OF THE INTERSECTION OF THE DUCTS AND IF THE BRACING IS SIZED FOR THE LARGER DUCT (SEE PAGE 4.2. DUCT JOINT TO SCALE SHALL CONFORM TO SMACNA DUCT CONSTRUCTION STANDARDS.
5. A GROUP OF DUCTS MAY BE COMBINED IN A LARGER FRAME SO THAT THE COMBINED WEIGHTS AND DIMENSIONS OF THE DUCTS ARE LESS THAN OR EQUAL TO THE MAXIMUM WEIGHT AND DIMENSIONS OF THE DUCT FOR WHICH BRACING DETAILS ARE SELECTED. (EXAMPLE: TO BRACE A 30" X 30" DUCT BESIDE A 54" X 28" DUCT, SELECT BRACING FOR AN 84"X 42" DUCT. THE HORIZONTAL DIMENSION OF THE 84" X 42' DUCT IS EQUAL TO THAT OF THE COMBINED DUCTS AND ITS WEIGHT IS GREATER THAN THEIR COMBINED WEIGHTS.)
6. WALLS, INCLUDING GYPSUM BOARD NONBEARING PARTITIONS, WHICH HAVE DUCTS RUNNING THROUGH THEM MAY REPLACE A TYPICAL TRANSVERSE BRACE. PROVIDE SOLID BLOCKING AROUND DUCT PENETRATIONS AT STUD WALL CONSTRUCTION.
7. UNBRACED DUCTS SHALL BE INSTALLED WITH A 6" MINIMUM CLEARANCE TO VERTICAL CEILING HANGER WIRES.

TESTING AND BALANCING BUILDING HVAC

1. THE CONTRACTOR SHALL MEASURE, TEST, ADJUST, AND BALANCE ALL (N) AND (E) MECHANICAL EQUIPMENT, AIR TERMINALS, ETC., FOR THE ENTIRE BUILDING PER ANSI/ASHRAE STANDARD 111-2008. SEE 2007 AS-BUILT TEST AND BALANCE REPORT FOR (E) HVAC SYSTEM ON DRAWINGS M3.01 THRU M3.04.
2. THE CONTRACTOR SHALL PROVIDE TITLE 24 ACCEPTANCE FORMS BELOW FOR THE NEW UNIT AND VAV BOXES:
   a. OUTDOOR AIR .
   b. AIR ECONOMIZER CONTROLS .
   c. DEMAND CONTROL VENTILATION SYSTEMS .
   d. SUPPLY AIR TEMPERATURE RESET CONTROLS .
   e. SUPPLY FAN VARIABLE FLOW CONTROLS.

HVAC GENERAL NOTES

1. GENERAL NOTES, SYMBOL LIST AND DETAILS ARE APPLICABLE TO ALL DRAWINGS WITHIN DIVISION 23 (MECHANICAL).
2. DRAWINGS ARE DIAGRAMMATIC, THEREFORE DETERMINE EXACT LOCATIONS OF SYSTEMS AND COMPONENTS IN FIELD.
3. COORDINATE WORK OF THIS SECTION WITH THAT OF OTHER SECTIONS.
4. COORDINATE ROOF PENETRATIONS WITH WORK OF OTHER SECTIONS AND WITH FLASHING REQUIREMENTS. COORDINATE THE LOCATION OF ALL ROOF OPENINGS, AND EQUIPMENT LOCATIONS WITH THE ARCHITECTURAL AND STRUCTURAL PLANS, PRIOR TO ANY INSTALLATION.
5. SHEET METAL FITTINGS SHOWN ARE TO BE PROVIDED. NO SUBSTITUTES SHALL BE ALLOWED WITHOUT PRIOR CONSENT FROM ARCHITECT/ENGINEER.
6. RUN DUCTS AND PIPING CONCEALED, UNLESS SPECIFIED OTHERWISE, AND CLEAR OF CEILING INSERTS. ALL DUCTWORK SHALL BE INSTALLED AS CLOSE AS POSSIBLE TO WALL AND UNDERSIDE OF BEAMS AND JOISTS.
7. INSTALL THERMOSTATS 3 FEET 8 INCHES (44 INCHES) ABOVE FINISHED FLOOR OR AS DIRECTED OTHERWISE BY ARCHITECT.
8. ALL WORK SHALL BE COORDINATED WITH ALL TRADES INVOLVED. OFFSETS IN PIPING AND DUCTS (INCLUDING DIVIDED DUCTS) AND TRANSITIONS AROUND OBSTRUCTIONS SHALL BE PROVIDED AT NO ADDITIONAL COST TO THE OWNER.
9. VERIFY ALL EQUIPMENT CONNECTIONS WITH MANUFACTURER'S CERTIFIED DRAWINGS. VERIFY AND PROVIDE DUCT TRANSITIONS TO FURNISHED EQUIPMENT. FIELD VERIFY AND COORDINATE ALL DIMENSIONS BEFORE FABRICATION.
10. ACCESS PANELS SHALL BE PROVIDED TO SERVICE DAMPERS AND ALL CONCEALED MECHANICAL EQUIPMENTS AND ALL DAMPERS
11. ALL SERVICE ACCESS DOORS AT THE AIR MOVING EQUIPMENT SHALL BE HINGED AND LOCKABLE
12. SUPPORT ALL EQUIPMENT, PIPING AND DUCTWORK FROM BUILDING STRUCTURE TO PROVIDE A VIBRATION FREE INSTALLATION. NOTIFY ARCHITECT AND STRUCTURAL ENGINEER OF ALL WEIGHTS AND METHODS OF SUPPORT.
13. ALL CONTROL WIRE AND CONDUIT SHALL COMPLY WITH NEC AND DIVISION 26 OF TERMINAL DEVICES.
14. INTERNAL AIR FLOW DIMENSIONS ARE SHOWN FOR DUCTS. CONTRACTOR SHALL INCREASE SIZE FOR LINER IF APPLICABLE.
15. ALL MATERIALS AND EQUIPMENT SHALL BE NEW.
16. ALL NEW EQUIPMENT SHALL BE BALANCED AS PER DRAWINGS. IF DRAWINGS DO NOT PROVIDE INFORMATION NECESSARY TO PROPERLY BALANCE THE EQUIPMENT, DATA FROM SCHEDULES SHALL BE USED.
17. DIFFUSER SIZES SHOWN ARE NECK SIZES; REGISTERS AND GRILLES ARE NOMINAL.
18. COORDINATE THE LOCATION OF ALL CEILING DIFFUSERS, REGISTERS, AND GRILLES WITH THE ARCHITECTURAL REFLECTED CEILING PLAN AND ROOM ELEVATIONS. IF A QUESTION ARISES AS TO THE LOCATION OF ANY AIR DISTRIBUTION DEVICE, COORDINATE LOCATION WITH THE DESIGN ENGINEER.
19. PROVIDE FLEXIBLE CONNECTION ON ALL DUCTS CONNECTING TO AIR HANDLING UNITS. ALL DUCTS TO BE GROUNDED ACROSS FLEXIBLE CONNECTION WITH FLEXIBLE COPPER GROUND STRAPS.
20. THE INSIDE OF ALL UNLINED DUCTWORK VISIBLE THROUGH A GRILLE OR DIFFUSER SHALL BE PAINTED FLAT BLACK.
21. PROVIDE OPPOSED BLADE DAMPERS AT EACH SUPPLY AIR DIFFUSER.
22. INSTALL MANUAL VOLUME DAMPER AT EACH BRANCH DUCT, WHERE SHOWN ON PLANS. PROVIDE EXTENDED OPERATING HANDLE. ALL HANDLES SHALL BE FLAGGED WITH BRIGHT COLOR RIBBON.
23. INSULATE PIPING AND DUCTWORK AS SPECIFIED: PERFORM TESTS SPECIFIED BEFORE INSULATING.
24. ALL CONDENSATE DRAIN LINES SHALL BE PIPED FULL SIZE OF THE UNIT DRAIN OUTLET, WITH "P" TRAP, CONNECTED TO PLUMBING AS INDICATED ON DRAWINGS.
25. IT IS NOT OUR INTENTION TO SHOW EVERY ACCESS DOOR REQUIRED. WHERE POSSIBLE, ACCESS DOORS MUST BE ALIGNED IN STRAIGHT RUNS WHERE MULTIPLE DOORS ARE VISIBLE. LOCATE ALL DEVICES REQUIRING ACCESS DOORS IN SUCH MANNER THAT THE LOCATION OF MULTIPLE DEVICES TAKE ADVANTAGE OF THE LEAST NUMBER OF ACCESS DOORS. COORDINATE LOCATIONS OF ACCESS DOORS WITH OTHER TRADES AND WITH THE ARCHITECT. SUBMIT DRAWINGS SHOWING ALL ACCESS DOORS; TO BE REVIEWED BY THE ARCHITECT AND ENGINEER, PRIOR TO INSTALLATION
26. ALL AIR HANDLING UNITS GREATER THAN 2,000 CFM REQUIRE DUCT DETECTORS.

MECHANICAL SHEET INDEX

M0.01	ABBREVIATIONS, LEGENDS AND NOTES - MECHANICAL
M0.02	SCHEDULES - MECHANICAL
MD2.01	FIRST LEVEL DEMOLITION FLOOR PLAN HVAC - MECHANICAL
MD2.02	SECOND LEVEL DEMOLITION FLOOR PLAN HVAC - MECHANICAL
MD2.03	DEMOLITION ROOF PLAN HVAC - MECHANICAL
M2.01	FIRST LEVEL FLOOR PLAN HVAC - MECHANICAL
M2.02	SECOND LEVEL FLOOR PLAN HVAC - MECHANICAL
M2.03	ROOF PLAN HVAC - MECHANICAL
M3.01	2007 AS-BUILT TEST AND BALANCE REPORT - REFERENCE ONLY - MECHANICAL
M3.02	2007 AS-BUILT TEST AND BALANCE REPORT - REFERENCE ONLY - MECHANICAL
M3.03	2007 AS-BUILT TEST AND BALANCE REPORT - REFERENCE ONLY - MECHANICAL
M3.04	2007 AS-BUILT TEST AND BALANCE REPORT - REFERENCE ONLY - MECHANICAL
M6.01	DIAGRAMS - MECHANCIAL
M7.01	DETAILS - MECHANICAL
BE1.01	BUILDING ENERGY ANALYSIS
BE1.02	BUILDING ENERGY ANALYSIS

GENERAL MECHANICAL NOTES

1. ALL WORK TO BE PERFORMED UNDER THE DIRECTION OF THE OWNER'S REPRESENTATIVE.
2. ORDINANCES AND REGULATIONS: ALL WORK SHALL CONFORM TO APPLICABLE REQUIREMENTS OF LEGAL AUTHORITIES HAVING JURISDICTION. ORDINANCES SHALL GOVERN OVER DRAWINGS UNLESS THE DRAWINGS REQUIRE HIGHER STANDARDS OR LARGER SIZES.
3. CODES AND STANDARDS: WORK SHALL BE PERFORMED IN COMPLIANCE WITH LATEST EDITION OF THE FOLLOWING REFERENCED CODES AND STANDARDS AS AMENDED TO THE DATE OF THESE DRAWINGS.
   A. CALIFORNIA MECHANICAL CODE (CMC). 2019.
   B. CALIFORNIA PLUMBING CODE (CPC). 2019.
   C. CALIFORNIA ELECTRICAL CODE (CEC). 2019.
   D. CALIFORNIA BUILDING CODE (CBC). 2019.
   E. NATIONAL FIRE PROTECTION ASSOCIATION (NFPA). 2019.
   F. CALIFORNIA ADMINISTRATIVE CODE. 2019.
   G. OCCUPATIONAL SAFETY AND HEALTH ADMINISTRATION (OSHA).
   H. OFFICE OF STATE FIRE MARSHAL.
   I. AMERICAN NATIONAL STANDARDS INSTITUTE (ANSI).
   J. AMERICAN SOCIETY FOR TESTING AND MATERIALS (ASTM).
   K. UNDERWRITER'S LABORATORY (UL).
4. THE CONTRACTOR IS RESPONSIBLE FOR ALL ITEMS DETAILED IN THESE NOTES.
5. PRIOR TO COMMENCING ANY WORK, EXAMINE THE SITE IN DETAIL, THOROUGHLY REVIEW ALL PLANS, SPECIFICATIONS AND ANY OTHER DATA SUPPLIED BY THE OWNER. VERIFY ALL CONDITIONS AND DIMENSIONS. ANY DISCREPANCY OR INCONSISTENCY SHALL BE REPORTED TO THE ENGINEER.

SEISMIC BRACING GUIDELINES

ALL MECHANICAL DUCT, PIPING AND EQUIPMENT SHALL BE BRACED OR ANCHORED TO RESIST A SEISMIC FORCE ACTING IN ANY DIRECTION USING THE FOLLOWING CRITERIA:

1. THE TOTAL DESIGN LATERAL SEISMIC FORCE SHALL BE DETERMINED FROM ASCE 7-05 EQUATION (13.3-1). FORCES SHALL BE APPLIED IN THE HORIZONTAL DIRECTIONS, WHICH RESULT IN THE MOST CRITICAL LOADINGS FOR DESIGN. IN ADDITION, THE COMPONENT SHALL BE DESIGNED FOR A CONCURRENT VERTICAL FORCE PER SECTION 13.3.1.
2. THE VALUE OF Ap (COMPONENT AMPLIFICATION FACTOR) AND Rp (COMPONENT RESPONSE MODIFICATION FACTOR) OF ASCE 7-05 SECTION 13.3.1 SHALL BE SELECTED FROM TABLE 13.6-1. THE VALUE OF Ip (COMPONENT IMPORTANCE FACTOR) AND Sds (SPECTRAL ACCELERATION- SHORT PERIOD) SHALL BE DETERMINED FROM SECTION 13.1.3 AND 11.4.4, RESPECTIVELY.

WHERE ANCHORAGE DETAILS ARE NOT SHOWN ON THE DRAWINGS, THE FIELD INSTALLATION SHALL BE SUBJECT TO THE APPROVAL OF THE ARCHITECT, STRUCTURAL ENGINEER AND MECHANICAL ENGINEER

MEANS & METHODS

1. SEQUENCING OF ALL WORK IS THE RESPONSIBILITY OF THE GENERAL CONTRACTOR. GENERAL CONTRACTOR TO ENSURE THAT EXISTING TENANT OPERATIONS REMAIN UNINTERRUPTED DURING SWITCHOVER OF MECHANICAL CONNECTIONS.
2. THE CONTRACTOR SHALL DETERMINE THE MEANS AND METHODS REGARDING CONSTRUCTION STAGING.

DEMOLITION NOTES

1. ALL WORK SHALL BE PER THE APPLICABLE BUILDING CODES AND ORDINANCES OF THE STATE OF CALIFORNIA AND CDCR DESIGN AND CONSTRUCTION POLICY GUIDELINES.
2. LOCATIONS AND SIZES OF (E) EQUIPMENT, DUCTWORK, AIR TERMINALS, ETC., ARE APPROXIMATE, BASED ON THE BEST AVAILABLE INFORMATION OBTAINABLE AT THE SITE. VERIFY EXACT LOCATIONS AND SIZES OF ALL EXISTING SYSTEMS BEFORE START OF WORK.
3. CONTRACTORS SHALL NOT SCALE FROM DRAWINGS. VERIFY ALL DIMENSIONS AND CONDITIONS IN THE FIELD. NOTIFY THE ARCHITECT OR ENGINEER OF ANY DISCREPANCIES ON DRAWINGS REQUIRING CLARIFICATION OR REVISION BEFORE COMMENCING WITH THE WORK.
4. CONTRACTOR SHALL PROTECT ALL EXISTING CONDITIONS THAT ARE TO REMAIN AND SECURE THE PROPERTY DURING CONSTRUCTION.
5. VERIFY ALL EXISTING CONDITIONS AND UTILITIES IN THE FIELD. NOTIFY ARCHITECT OF ANY DISCREPANCIES THAT MAY OCCUR.
6. CONTRACTOR SHALL VERIFY AND LOCATE ALL EXISTING UNDERGROUND UTILITIES AND SHALL AVOID DAMAGE TO THE SAME.
7. VERIFY ALL CRITICAL DIMENSIONS FOR EXISTING CONDITIONS IN THE FIELD BEFORE FABRICATION OR CONSTRUCTION OF NEW WORK.
8. PROVIDE SAFEGUARDS FOR CONSTRUCTION, ALTERATIONS, AND DEMOLITION OPERATIONS TO PROVIDE REASONABLE SAFETY TO LIFE AND PROPERTY FROM FIRE DURING SUCH OPERATIONS, COMPLYING WITH "FIRE SAFETY DURING CONSTRUCTION AND DEMOLITION" per 2016 CALIFORNIA BUILDING CODE, CALIFORNIA FIRE CODE CHAPTER 33, AND CALIFORNIA CODE OF REGULATIONS TITLE 19, DIVISION 1.

NAPA COUNTY CALIFORNIA

A Tradition of Stewardship
A Commitment to Service

MK2 ENGINEERS

Green Valley Executive Center
5030 Business Center Drive,
Suite 150
Fairfield, CA 94534
(707) 759-5260
www.mk2eng.com

REGISTERED PROFESSIONAL ENGINEER M. MIKE KIANI M030804 12-31-20 MECHANICAL STATE OF CALIFORNIA

THE DRAWINGS, PLANS, SPECIFICATIONS, ELECTRONIC DATABASE AND OTHER INSTRUMENTS OF PROFESSIONAL SERVICE PREPARED BY OR ON BEHALF OF CONSULTANT SHALL BECOME THE PROPERTY OF THE OWNER UPON PAYMENT FOR SUCH WORK. THESE DRAWINGS HAVE BEEN PREPARED SPECIFICALLY FOR THIS PROJECT AND SHALL NOT BE USED FOR ANY OTHER PROJECT, BY ANY OTHER ENTITY OR IN ANY OTHER LOCATION.

811 Know what's below. Call before you dig.
CALL 811 TWO FULL BUSINESS DAYS, MAXIMUM 14 CALENDAR DAYS, BEFORE DIGGING.

No.:	Revision:	Date:
	650 IMPERIAL WAY BID SET	2020-09-24

NAPA COUNTY
PUBLIC WORKS

PROJECT:
650 IMPERIAL WAY - HVAC SYSTEM UPGRADE PROJECT PW 18-03

650 IMPERIAL WAY
NAPA, CA 94559

650 IMPERIAL WAY HVAC SYSTEM UPGRADE PW 18-03 BID SET - 2020/09/24

SHEET CONTENTS:
ABBREVIATIONS, LEGENDS AND NOTES

MECHANICAL
BID SET

PROJECT DATE:	2020/02/05
SCALE:	AS NOTED
SHEET ISSUED DATE:	2020/09/24
APPROVED BY:	MK
DESIGN BY:	MK/SC
DRAWN BY:	DC/JH/AJ
CHECKED BY:	MK/SC
PROJECT NO.:	PW 18-03 / 20003.00

SHEET NO.:
M0.01

P:\2020\20003 - 650 IMPERIAL WAY - HVAC\DRAW\MK2-FILES\20003 - M0-01.DWG - PLOTTED BY ABDI JAMA

ROOFTOP UNIT SCHEDULE

SYMBOL	MANUFACTURER		SERVICE	NOMINAL TON	COOLING			HEATING				SUPPLY FAN				MIN. OSA (CFM)	DESIGN AMBIENT DB (°F)	DESIGN AMBIENT WB (°F)	VOLTAGE/ PHASE	MIN. CIRCUIT AMP	MOCP	GAS CONNECTION	OPERATING WEIGHT (LBS)	REMARKS
	MAKE	MODEL			TOTAL MBH	SENSIBLE MBH	EER	TOTAL MBH	TYPE	INPUT MBH	AFUE	NOM. CFM	ESP (IN. WG.)	HP	BHP									
(E) AC-1	Carrier	50PG-C28FC-50-LY	FIRST AND SECOND FLOOR WEST	25.0	311.0	215.0	11.0	-	NONE	-	-	8000	1.4	15.0	5.7	2000	-	-	208/3Ø	142	150	-	2800	10
(E) AC-2	Carrier	50PG-C28FD-50-LY	FIRST FLOOR EAST	28.0	316.2	235.3	11.0	-	NONE	-	-	10000	1.4	15.0	10.4	2000	-	-	208/3Ø	149	175	-	2800	10
(N) AC-3	Carrier	50A2-035-P3541EJ	SECOND FLOOR EAST	35.0	383.9	371.8	10.0	-	NONE	-	-	15000	1.0	15.0	11.3	-	104	70	208/3Ø	179	225	-	4332	1,2,3,4,5,6,7,8,9

1. PROVIDE ONE PREMANUFACTURED ROOF CURB. SEE CURB DETAIL 7/M7.01.
2. PROVIDE SINGLE ZONE VAV CONTROLLER - CONTROLLER WITH DISCHARGE AIR, RETURN AIR, AND OUTSIDE AIR SENSOR.
3. PROVIDE MERV 13 FILTERS.
4. INVERTER RATED 3-PHASE MOTOR + VFD.
5. PROVIDE CONDENSER COIL HAIL GUARD.
6. COOLING MODE ONLY.
7. PRESSURE SENSOR LOCATION.
8. 100% ECONOMIZER WITH RELIEF DAMPER.
9. PROVIDE BACNET CONTROLLER W/BACNET MS/TP INTERFACE.
10. EXISTING UNIITS TO REMAIN.

SUPPLY DIFFUSERS

MARK OR SYMBOL	CFM RANGE	NECK SIZE	DUCT CONN SIZE
ONE WAY FLOW	UP TO 100	6x6	7" DIA
	101–180	8x8	8" DIA
TWO WAY FLOW	181–275	10x10	9" DIA
	276–400	12x12	10" DIA
CORNER FLOW	401–545	14ø	12" DIA
	546–710	16ø	12" DIA
THREE WAY FLOW	UP TO 100	6x6	7" DIA
	101–180	8x8	9" DIA
	181–275	10x10	10" DIA
	276–400	12x12	11" DIA
FOUR WAY FLOW	401–545	14ø	12" DIA
	546–710	16ø	14" DIA

RETURN AND EXHAUST REGISTERS

MARK OR SYMBOL	CFM RANGE	NECK SIZE	DUCT CONN SIZE
EXHAUST	UP TO 70	6x6	6" DIA
	71–175	9x9	8" DIA
	176–275	9x9	10" DIA
	276–400	12x12	11" DIA
RETURN	401–550	15x15	12" DIA
	551–750	18x18	14" DIA
	751–1400	18x18	15" DIA

1. ALL SUPPLY AIR DISTRIBUTION CORES TO PROVIDE EQUAL AIR FLOW IN EACH DIRECTION.
2. NOISE LEVEL NOT TO EXCEED NC 30.
3. REFER TO ARCH DRAWINGS FOR FRAME STYLE TYPES.
4. FURNISH SQUARE TO ROUND TRANSITION COLLARS.
5. PROVIDE OBD FOR FINE AIR FLOW TUNING.
6. IN ACOUSTICAL CEILING, PROVIDE 24X24 OR 12x12 FLUSH MOUNTED DIFFUSERS AND REGISTERS.
7. IN GYP. BD. CEILING & WALLS PROVIDE SURFACE MOUNTED DIFFUSERS AND REGISTERS.
8. FOR AIR DEVICES MOUNTED IN THE SAME PLANE OF VIEW, APPEARANCE OF THE SUPPLY AIR DIFFUSER AND RETURN AIR GRILLE SHALL BE SAME.

SUP. DIFFUSERS TO BE FOLLOWING TYPE OR EQUAL:
1. IN ACOUSTICAL CEILING – NAILOR 4320
2. IN GYP. BD. CEILING – NAILOR 6550
3. WALL MOUNTED – NAILOR 61DH–O
4. EXPOSED DUCT MOUNTED– NAILOR 61SH–O
5. LINEAR BAR GRILLE – NAILOR 49–480

RETURN REGISTERS TO BE FOLLOWING TYPE OR EQUAL:
1. IN ACOUSTICAL CEILING – NAILOR 4360
2. IN GYP. BD. CEILING – NAILOR 6500
3. WALL MOUNTED – NAILOR 6145H
4. EXPOSED DUCT MOUNTED– NAILOR 6145H
5. LINEAR BAR GRILLE – NAILOR 49–480

PROVIDE MANUFACTURER INSTALLED OPPOSED BLADE DAMPERS AT ALL SUPPLY DIFFUSER

HEATING UNIT SCHEDULE

SYMBOL	MAKE	MODEL	SUPPLY FAN						GAS INPUT (BTU)	GAS OUTPUT (BTU)	EFF %	FILTERS		WEIGHT (LBS)	REMARKS
			CFM	TSP "W.C.	BHP	HP	RPM	VOLT-PH				DESCRIPTION	AIR PD "W.C.		
HU-1	REZNOR	PREEVA RDH-200	3000	1.25	1.61	2.0	1106	208/3Ø	200.0	162.0	81	FLAT, DISPOS.	0.5	1100	1,2,3,4,5,6
HU-2	REZNOR	PREEVA RDH-175	2400	1.25	1.30	2.0	1064	208/3Ø	150.0	121.5	81	FLAT, DISPOS.	0.5	950	1,2,3,4,5,6
HU-3	REZNOR	PREEVA RDH-200	3000	1.25	1.61	2.0	1106	208/3Ø	200.0	162.0	81	FLAT, DISPOS.	0.5	1100	1,2,3,4,5,6

1. PROVIDE WITH FULL PERIMETER ROOF CURB.
2.PROVIDE WITH DOWNTURN PLENUM, AND FILTER MIXING BOX.
3. PROVIDE WITH VFD ON SUPPLY FAN AND FULLY MODULATING GAS VALVE.
4. PROVIDE WITH UNIT DISCONNECT AND SMOKE DETECTOR.
5. UNIT IS 100% RA WITH SA-RA- BYPASS. NO OUTSIDE AIR.
6.PROVIDE WITH DG-40 CONTROL MODULE FOR BACNET INTERFACES.

DUAL DUCT VAV BOX SCHEDULE

SYMBOL	TITUS MODEL	SERVING	UNITS SIZE	DUCT SIZE (IN)			CFM		BOX MAX. P("WG)	REMARKS
				OUTLET	COLD	HOT	MIN.	MAX.		
VAV-1.6	DEDV	FIRST FLOOR EAST	7	12"X10"	12Ø	8Ø	450	650	0.63	1,2,3,4
VAV-1.8	DEDV	FIRST FLOOR EAST	7	10"X8"	18Ø	8Ø	450	650	0.63	1,2,3,4
VAV-1.10	DEDV	FIRST FLOOR EAST	12	18Ø	18Ø	10Ø	1200	2000	0.71	1,2,3,4
VAV-1.11	DEDV	FIRST FLOOR EAST	12	20"X16"	18Ø	14Ø	1200	2000	0.68	1,2,3,4
VAV-2.11	DEDV	SECOND FLOOR EAST	12	16Ø	16Ø	12Ø	1200	2000	0.68	1,2,3,4
VAV-2.12	DEDV	SECOND FLOOR EAST	14	16Ø	16Ø	14Ø	1500	3000	0.57	1,2,3,4
VAV-2.13	DEDV	SECOND FLOOR EAST	12	16Ø	16Ø	12Ø	1200	2000	0.68	1,2,3,4
VAV-2.17	DEDV	SECOND FLOOR EAST	12	18Ø	16Ø	14Ø	1200	2000	0.68	1,2,3,4

1. PROVIDE WITH INTEGRAL ATTENUATOR
2. DOUBLE DUCT BOX, W'DDC CONTROL.
3.DUAL DENSITY INSULATION. TREATED TO RESIST AIR EROSION.
4. PROVIDE DIRECT DIGITAL CONTROL THERMOSTAT.

A Tradition of Stewardship
A Commitment to Service

MK2 ENGINEERS

Green Valley Executive Center
5030 Business Center Drive,
Suite 150
Fairfield, CA 94534
(707) 759-5260
www.mk2eng.com

REGISTERED PROFESSIONAL ENGINEER
M. MIKE KIANI
M020804
12-31-20
MECHANICAL
STATE OF CALIFORNIA

THE DRAWINGS, PLANS, SPECIFICATIONS, ELECTRONIC DATABASE AND OTHER INSTRUMENTS OF PROFESSIONAL SERVICE PREPARED BY OR ON BEHALF OF CONSULTANT SHALL BECOME THE PROPERTY OF THE OWNER UPON PAYMENT FOR SUCH WORK. THESE DRAWINGS HAVE BEEN PREPARED SPECIFICALLY FOR THIS PROJECT AND SHALL NOT BE USED FOR ANY OTHER PROJECT. BY ANY OTHER ENTITY OR IN ANY OTHER LOCATION.

811 Know what's below. Call before you dig.

CALL 811 TWO FULL BUSINESS DAYS, MAXIMUM 14 CALENDAR DAYS, BEFORE DIGGING.

No.:	Revision:	Date:
	650 IMPERIAL WAY BID SET	2020-09-24

NAPA COUNTY
PUBLIC WORKS

PROJECT:
650 IMPERIAL WAY - HVAC SYSTEM UPGRADE
PROJECT PW 18-03

650 IMPERIAL WAY
NAPA, CA 94559

650 IMPERIAL WAY HVAC SYSTEM UPGRADE PW 18-03 BID SET – 2020/09/24

SHEET CONTENTS:

SCHEDULES

MECHANICAL

BID SET

PROJECT DATE:	2020/02/05
SCALE:	AS NOTED
SHEET ISSUED DATE:	2020/09/24
APPROVED BY:	MK
DESIGN BY:	MK/SC
DRAWN BY:	DC/JH/AJ
CHECKED BY:	MK/SC
PROJECT NO.:	PW 18-03 / 20003.00

SHEET NO.:

M0.02

P:\2020\20003 – 650 IMPERIAL WAY – HVAC\DRAW\MK2-FILES\20003 – MO-02.DWG – PLOTTED BY ABDI JAMA

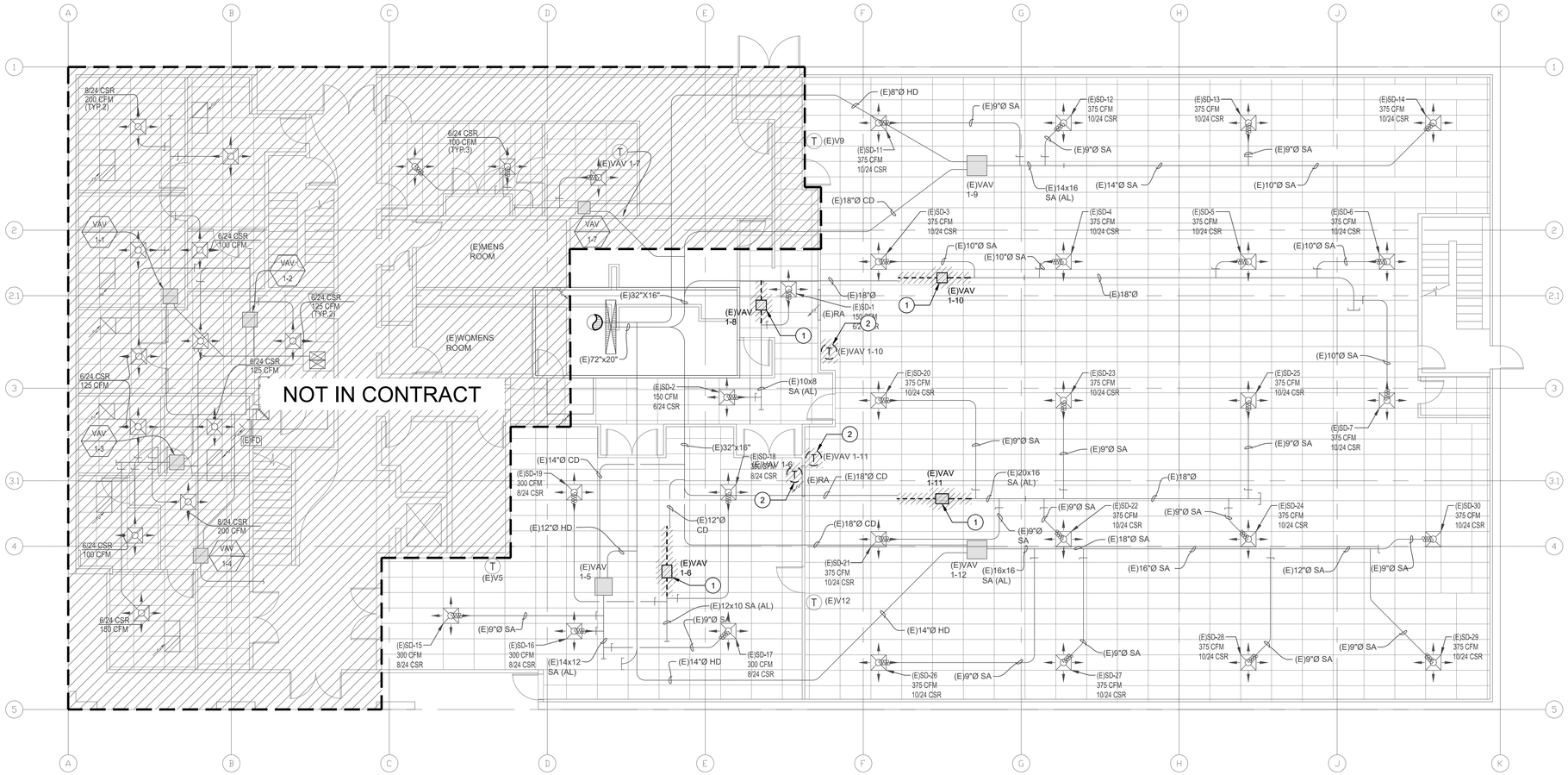

FIRST FLOOR DEMOLITION PLAN - MECHANICAL - HVAC (1)

SCALE: 1/8" = 1'-0" MD2.01

SHEET NOTES:

1. REMOVE (E) SINGLE-DUCT VAV BOXES, SUPPORTS, AND DUCTWORK AS SHOWN.
2. REMOVE (E) THERMOSTATS FOR SINGLE-DUCT VAV BOXES, AS SHOWN.

BID PACKAGE NOTES:

A. BASE BID:
- UPGRADE OF HVAC SYSTEMS SERVING FIRST AND SECOND FLOORS EAST SIDE, INCLUDES THE FOLLOWING EQUIPMENT & THE ASSOCIATED CONTROLS, DUCTWORK, PIPING, SUPPORTS, & ACCESSORIES:

- *DEMOLITION* - (E) AC-3, (E) VAV 1-6, (E) VAV 1-8, (E) VAV 1-10, (E) VAV 1-11, (E) VAV 2-11, (E) VAV 2-12, (E) VAV 2-13, & (E) VAV 2-17
- *ROOF* - AC-3
- *CONTROLLERS ON ROOF* - AC-1, AC-2, AC-3, HU-1, HU-2, & HU-3
- *FIRST AND SECOND FLOORS* - VAV 1-6, VAV 1-8, VAV 1-10, VAV 1-11, VAV 2-11, VAV 2-12, VAV 2-13, & VAV 2-17
- *FIRST AND SECOND FLOOR THERMOSTATS* - VAV 1-6, VAV 1-8, VAV 1-10, VAV 1-11, VAV 2-11, VAV 2-12, VAV 2-13, & VAV 2-17

B. BID ALTERNATE 1:
- REPLACEMENT "IN-KIND" OF EXISTING ROOFTOP HEATING UNITS, INCLUDES THE FOLLOWING EQUIPMENT & THE ASSOCIATED CONTROLS, DUCTWORK, PIPING, SUPPORTS, & ACCESSORIES:

- *DEMOLITION* - (E) HU-1, (E) HU-2, & (E) HU-3
- *ROOF* - HU-1, HU-2, & HU-3

N

GRAPHIC SCALE 8' 0 8' 16'

NAPA COUNTY CALIFORNIA

A Tradition of Stewardship
A Commitment to Service

MK2 ENGINEERS

Green Valley Executive Center
5030 Business Center Drive,
Suite 150
Fairfield, CA 94534
(707) 759-5260
www.mk2eng.com

REGISTERED PROFESSIONAL ENGINEER
M. MIKE KIANI
M020804
12-31-20
MECHANICAL
STATE OF CALIFORNIA

THE DRAWINGS, PLANS, SPECIFICATIONS, ELECTRONIC DATABASE AND OTHER INSTRUMENTS OF PROFESSIONAL SERVICE PREPARED BY OR ON BEHALF OF CONSULTANT SHALL BECOME THE PROPERTY OF THE OWNER UPON PAYMENT FOR SUCH WORK. THESE DRAWINGS HAVE BEEN PREPARED SPECIFICALLY FOR THIS PROJECT AND SHALL NOT BE USED FOR ANY OTHER PROJECT, BY ANY OTHER ENTITY OR IN ANY OTHER LOCATION.

811 Know what's below. Call before you dig.

CALL 811 TWO FULL BUSINESS DAYS, MAXIMUM 14 CALENDAR DAYS, BEFORE DIGGING.

No.:	Revision:	Date:
	650 IMPERIAL WAY BID SET	2020-09-24

NAPA COUNTY PUBLIC WORKS

PROJECT:
650 IMPERIAL WAY - HVAC SYSTEM UPGRADE
PROJECT PW 18-03

650 IMPERIAL WAY
NAPA, CA 94559

SHEET CONTENTS:
FIRST LEVEL DEMOLITION FLOOR PLAN HVAC MECHANICAL
BID SET

PROJECT DATE:	2020/02/05
SCALE:	AS NOTED
SHEET ISSUED DATE:	2020/09/24
APPROVED BY:	MK
DESIGN BY:	MK/SC
DRAWN BY:	DC/JH/AJ
CHECKED BY:	MK/SC
PROJECT NO.:	PW 18-03 / 20003.00

SHEET NO.:
MD2.01

650 IMPERIAL WAY HVAC SYSTEM UPGRADE PW 18-03 BID SET - 2020/09/24

P:\2020\20003 - 650 IMPERIAL WAY - HVAC\DRAW\MK2-FILES\20003 - MD2-01.DWG - PLOTTED BY DAVID COLEMAN

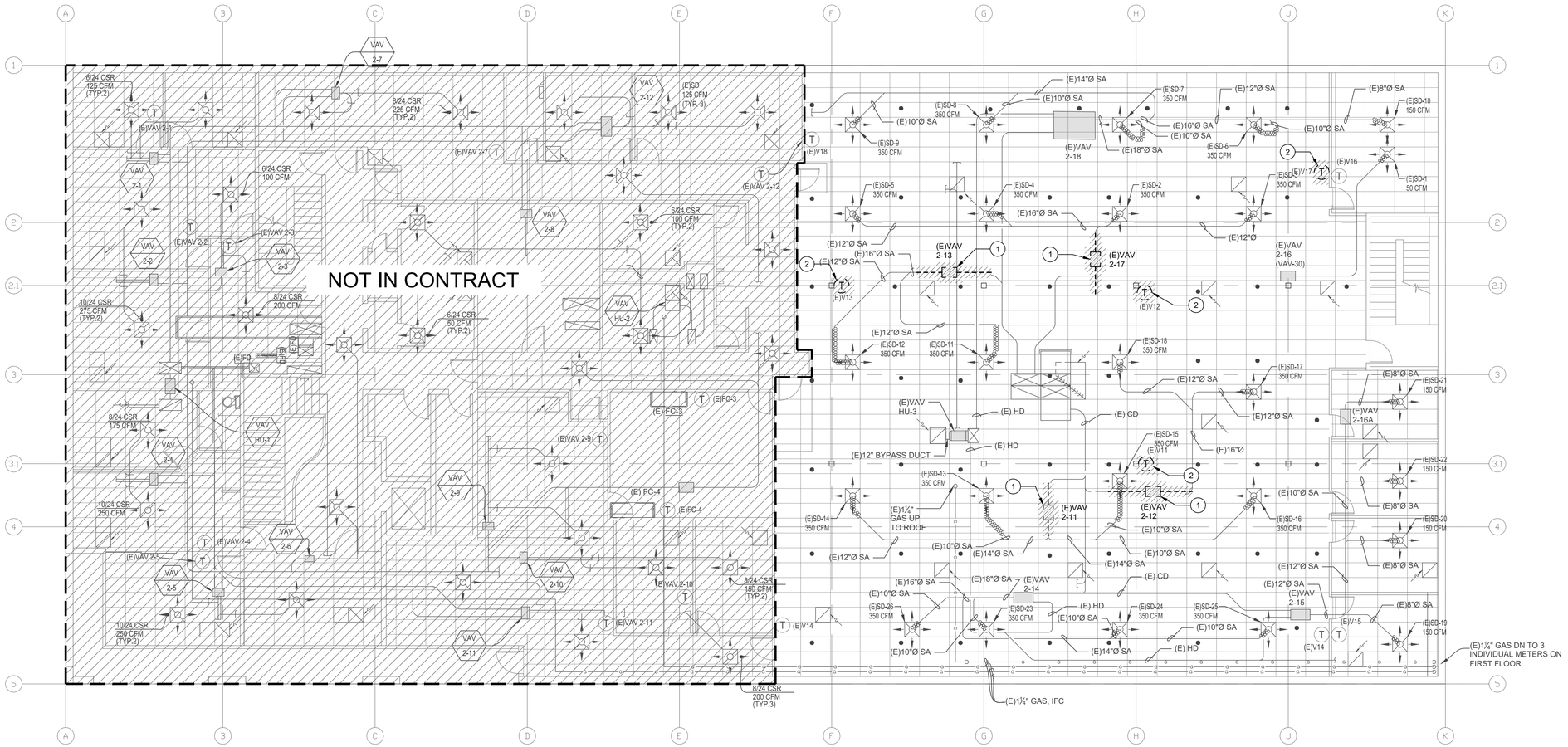

SHEET NOTES:

1. REMOVE (E) SINGLE-DUCT VAV BOXES, SUPPORTS, AND DUCTWORK AS SHOWN.
2. REMOVE (E) THERMOSTATS FOR SINGLE-DUCT VAV BOXES, AS SHOWN.

BID PACKAGE NOTES:

A. BASE BID:
- UPGRADE OF HVAC SYSTEMS SERVING FIRST AND SECOND FLOORS EAST SIDE, INCLUDES THE FOLLOWING EQUIPMENT & THE ASSOCIATED CONTROLS, DUCTWORK, PIPING, SUPPORTS, & ACCESSORIES:

- *DEMOLITION* - (E) AC-3, (E) VAV 1-6, (E) VAV 1-8, (E) VAV 1-10, (E) VAV 1-11, (E) VAV 2-11, (E) VAV 2-12, (E) VAV 2-13, & (E) VAV 2-17
- *ROOF* - AC-3
- *CONTROLLERS ON ROOF* - AC-1, AC-2, AC-3, HU-1, HU-2, & HU-3
- *FIRST AND SECOND FLOORS* - VAV 1-6, VAV 1-8, VAV 1-10, VAV 1-11, VAV 2-11, VAV 2-12, VAV 2-13, & VAV 2-17
- *FIRST AND SECOND FLOOR THERMOSTATS* - VAV 1-6, VAV 1-8, VAV 1-10, VAV 1-11, VAV 2-11, VAV 2-12, VAV 2-13, & VAV 2-17

B. BID ALTERNATE 1:
- REPLACEMENT "IN-KIND" OF EXISTING ROOFTOP HEATING UNITS, INCLUDES THE FOLLOWING EQUIPMENT & THE ASSOCIATED CONTROLS, DUCTWORK, PIPING, SUPPORTS, & ACCESSORIES:

- *DEMOLITION* - (E) HU-1, (E) HU-2, & (E) HU-3
- *ROOF* - HU-1, HU-2, & HU-3

SECOND FLOOR DEMOLITION PLAN - MECHANICAL - HVAC (1) MD2.02

SCALE: 1/8" = 1'-0"

GRAPHIC SCALE 8' 0 8' 16'

A Tradition of Stewardship
A Commitment to Service

MK2 ENGINEERS

Green Valley Executive Center
5030 Business Center Drive,
Suite 150
Fairfield, CA 94534
(707) 759-5260
www.mk2eng.com

REGISTERED PROFESSIONAL ENGINEER M. MIKE KIANI 20804 12-31-20 MECHANICAL STATE OF CALIFORNIA

THE DRAWINGS, PLANS, SPECIFICATIONS, ELECTRONIC DATABASE AND OTHER INSTRUMENTS OF PROFESSIONAL SERVICE PREPARED BY OR ON BEHALF OF CONSULTANT SHALL BECOME THE PROPERTY OF THE OWNER UPON PAYMENT FOR SUCH WORK. THESE DRAWINGS HAVE BEEN PREPARED SPECIFICALLY FOR THIS PROJECT AND SHALL NOT BE USED FOR ANY OTHER PROJECT, BY ANY OTHER ENTITY OR IN ANY OTHER LOCATION.

811 Know what's below. Call before you dig.

CALL 811 TWO FULL BUSINESS DAYS, MAXIMUM 14 CALENDAR DAYS, BEFORE DIGGING.

No.:	Revision:	Date:
	650 IMPERIAL WAY BID SET	2020-09-24

NAPA COUNTY PUBLIC WORKS

PROJECT:
650 IMPERIAL WAY - HVAC SYSTEM UPGRADE
PROJECT PW 18-03

650 IMPERIAL WAY
NAPA, CA 94559

SHEET CONTENTS:
SECOND LEVEL DEMOLITION FLOOR PLAN HVAC MECHANICAL
BID SET

PROJECT DATE:	2020/02/05
SCALE:	AS NOTED
SHEET ISSUED DATE:	2020/09/24
APPROVED BY:	MK
DESIGN BY:	MK/SC
DRAWN BY:	DC/JH/AJ
CHECKED BY:	MK/SC
PROJECT NO.:	PW 18-03 / 20003.00

SHEET NO.:
MD2.02

650 IMPERIAL WAY HVAC SYSTEM UPGRADE PW 18-03 BID SET - 2020/09/24

P:\2020\20003 - 650 IMPERIAL WAY - HVAC\DRAW\MK2-FILES\20003 - MD2-02.DWG - PLOTTED BY DAVID COLEMAN

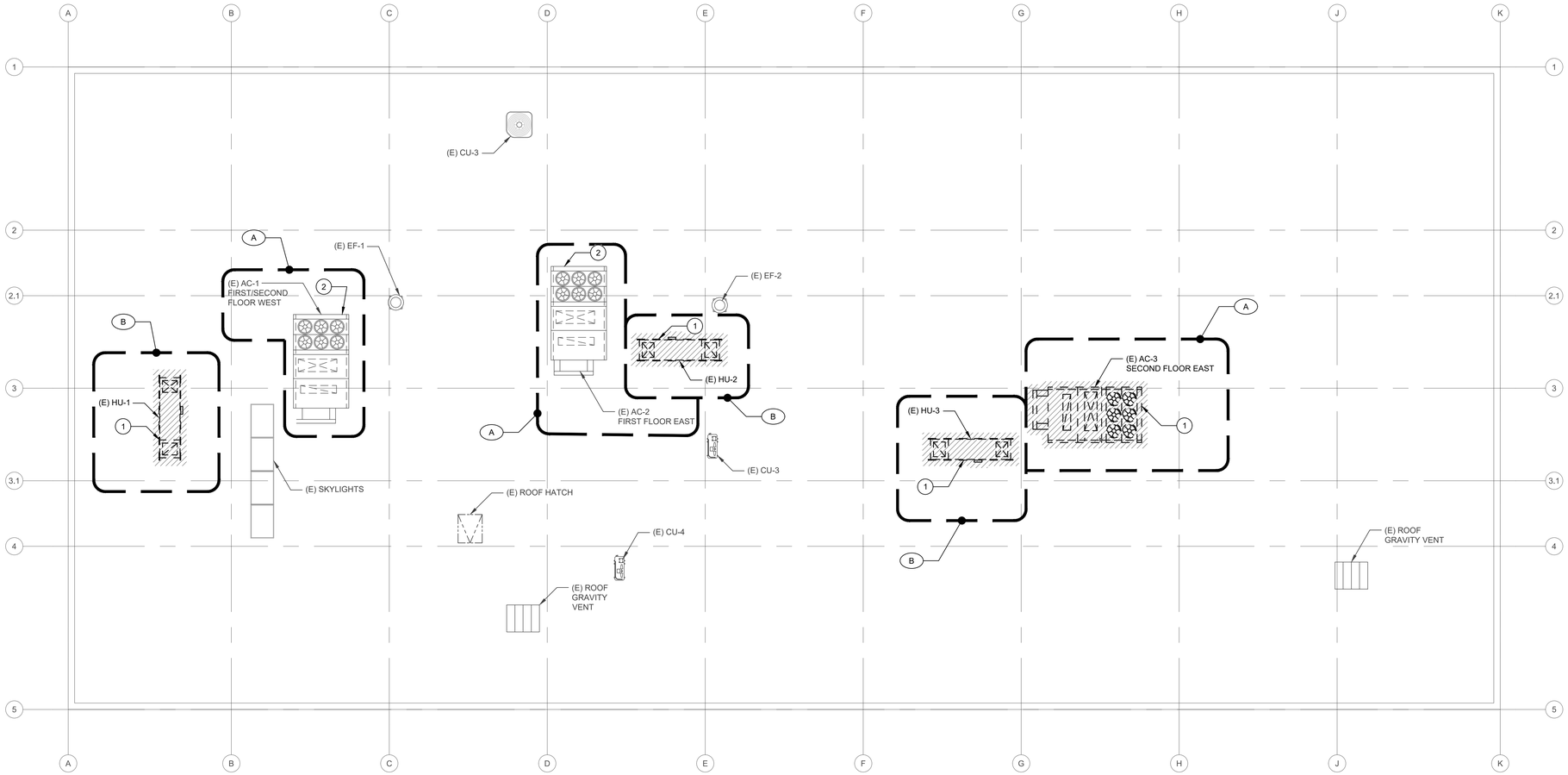

DEMOLITION ROOF PLAN - MECHANICAL - HVAC (1)

SCALE: 1/8" = 1'-0" MD2.03

SHEET NOTES:

1. REMOVE (E) ROOFTOP EQUIPMENT, AND DISCONNECT ALL UTILITIES. SEE PLUMBING DRAWINGS FOR PIPING.
2. REMOVE (E) CONTROLLERS ON AC-1 AND AC-2.

BID PACKAGE NOTES:

A. BASE BID:
- UPGRADE OF HVAC SYSTEMS SERVING FIRST AND SECOND FLOORS EAST SIDE, INCLUDES THE FOLLOWING EQUIPMENT & THE ASSOCIATED CONTROLS, DUCTWORK, PIPING, SUPPORTS, & ACCESSORIES:

- *DEMOLITION* - (E) AC-3, (E) VAV 1-6, (E) VAV 1-8, (E) VAV 1-10, (E) VAV 1-11, (E) VAV 2-11, (E) VAV 2-12, (E) VAV 2-13, & (E) VAV 2-17
- *ROOF* - AC-3
- *CONTROLLERS ON ROOF* - AC-1, AC-2, AC-3, HU-1, HU-2, & HU-3
- *FIRST AND SECOND FLOORS* - VAV 1-6, VAV 1-8, VAV 1-10, VAV 1-11, VAV 2-11, VAV 2-12, VAV 2-13, & VAV 2-17
- *FIRST AND SECOND FLOOR THERMOSTATS* - VAV 1-6, VAV 1-8, VAV 1-10, VAV 1-11, VAV 2-11, VAV 2-12, VAV 2-13, & VAV 2-17

B. BID ALTERNATE 1:
- REPLACEMENT "IN-KIND" OF EXISTING ROOFTOP HEATING UNITS, INCLUDES THE FOLLOWING EQUIPMENT & THE ASSOCIATED CONTROLS, DUCTWORK, PIPING, SUPPORTS, & ACCESSORIES:

- *DEMOLITION* - (E) HU-1, (E) HU-2, & (E) HU-3
- *ROOF* - HU-1, HU-2, & HU-3

N

GRAPHIC SCALE
8' 0 8' 16'

A Tradition of Stewardship
A Commitment to Service

MK2 ENGINEERS

Green Valley Executive Center
5030 Business Center Drive,
Suite 150
Fairfield, CA 94534
(707) 759-5260
www.mk2eng.com

REGISTERED PROFESSIONAL ENGINEER
M. MIKE KIANI
M020804
12-31-20
MECHANICAL
STATE OF CALIFORNIA

THE DRAWINGS, PLANS, SPECIFICATIONS, ELECTRONIC DATABASE AND OTHER INSTRUMENTS OF PROFESSIONAL SERVICE PREPARED BY OR ON BEHALF OF CONSULTANT SHALL BECOME THE PROPERTY OF THE OWNER UPON PAYMENT FOR SUCH WORK. THESE DRAWINGS HAVE BEEN PREPARED SPECIFICALLY FOR THIS PROJECT AND SHALL NOT BE USED FOR ANY OTHER PROJECT. BY ANY OTHER ENTITY OR IN ANY OTHER LOCATION.

811 Know what's below. Call before you dig.

CALL 811 TWO FULL BUSINESS DAYS, MAXIMUM 14 CALENDAR DAYS, BEFORE DIGGING.

No.:	Revision:	Date:
	650 IMPERIAL WAY BID SET	2020-09-24

NAPA COUNTY
PUBLIC WORKS

PROJECT:
650 IMPERIAL WAY - HVAC SYSTEM UPGRADE
PROJECT PW 18-03

650 IMPERIAL WAY
NAPA, CA 94559

SHEET CONTENTS:

DEMOLITION
ROOF PLAN
HVAC
MECHANICAL
BID SET

PROJECT DATE:	2020/02/05
SCALE:	AS NOTED
SHEET ISSUED DATE:	2020/09/24
APPROVED BY:	MK
DESIGN BY:	MK/SC
DRAWN BY:	DC/JH/AJ
CHECKED BY:	MK/SC
PROJECT NO.:	PW 18-03 / 20003.00

SHEET NO.:

MD2.03

650 IMPERIAL WAY HVAC SYSTEM UPGRADE PW 18-03 BID SET - 2020/09/24

P:\2020\20003 - 650 IMPERIAL WAY - HVAC\DRAW\MK2-FILES\20003 - MD2-03.DWG - PLOTTED BY DAVID COLEMAN

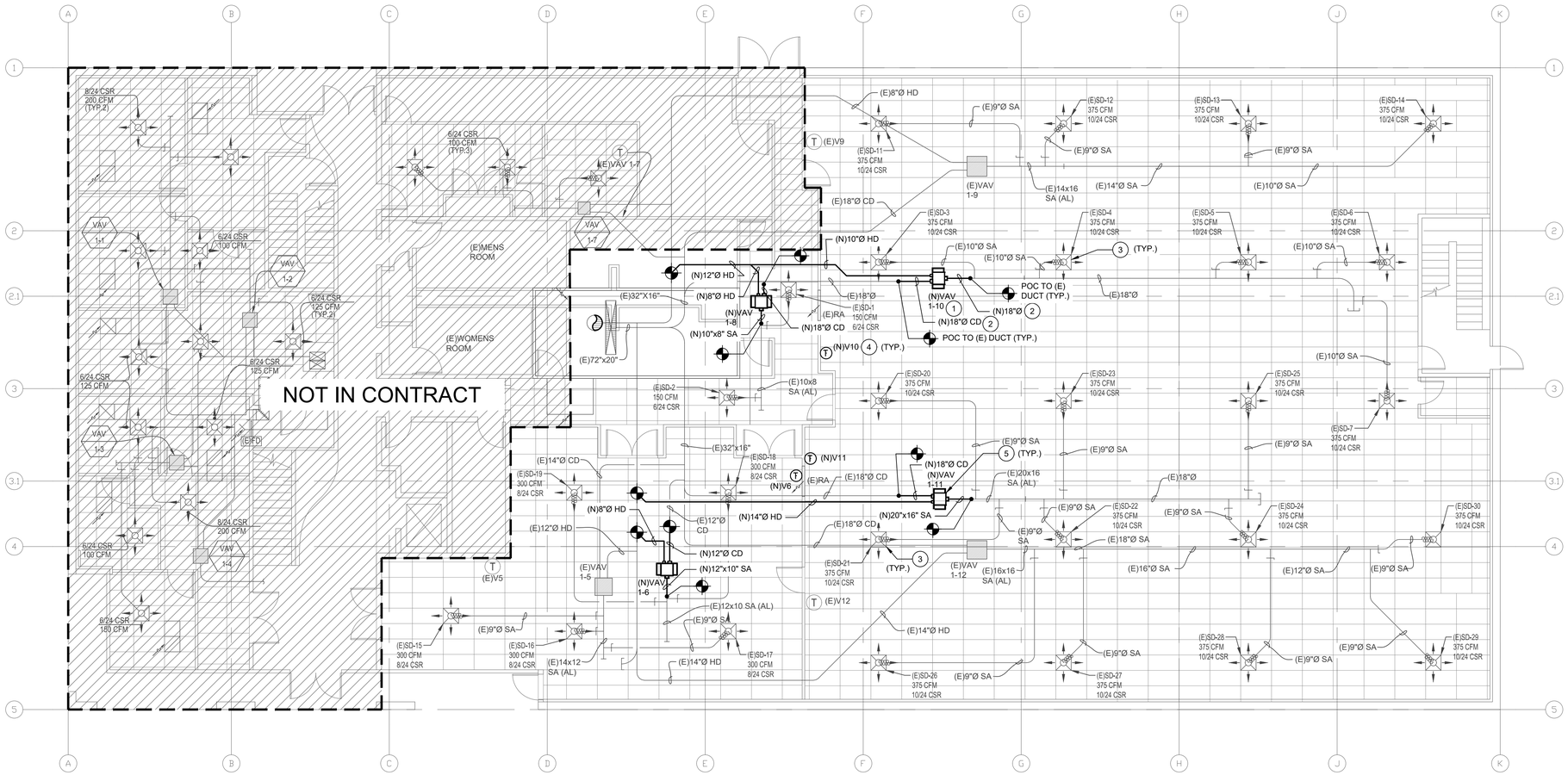

FIRST FLOOR PLAN - MECHANICAL - HVAC (1 / M2.01)

SCALE: 1/8" = 1'-0"

GENERAL NOTE:

1. LOCATIONS AND SIZES OF (E) MECHANICAL EQUIPMENT, DUCTWORK, AIR TERMINALS, ETC., ARE APPROXIMATE, BASED ON THE BEST AVAILABLE INFORMATION OBTAINABLE AT THE SITE. VERIFY EXACT LOCATIONS AND SIZES OF ALL EXISTING SYSTEMS BEFORE START OF WORK.
2. THE CONTRACTOR SHALL MEASURE, TEST, ADJUST, AND BALANCE ALL (N) AND (E) MECHANICAL EQUIPMENT, AIR TERMINALS, ETC., FOR THE ENTIRE BUILDING PER ANSI/ASHRAE STANDARD 111-2008. SEE 2007 AS-BUILT TEST AND BALANCE REPORT FOR (E) HVAC SYSTEM ON DRAWINGS M3.01 THRU M3.04.

SHEET NOTES:

1. (N) DUAL-DUCT VAV BOX, SUSPENDED FROM STRUCTURE, ABOVE CEILING. SEE SUPPORT DETAIL.
2. FOR DUCT MOUNTING, AND SUPPORT, SEE MECHANICAL DETAIL SHEETS.
3. BALANCE (E) AIR TERMINALS IN ZONES WITH (N) VAV BOXES. SEE SHEETS M3.01 THRU M3.04 FOR (E) TEST AND BALANCE REPORT ON (E) AIR TERMINALS.
4. COORDINATE FINAL THERMOSTAT LOCATION, AND MOUNTING HEIGHT WITH ENGINEER AND OWNER.
5. FOR ADDITIONAL EQUIPMENT NOTES, SEE SCHEDULES ON SHEET M0.02.

BID PACKAGE NOTES:

A. BASE BID:
- UPGRADE OF HVAC SYSTEMS SERVING FIRST AND SECOND FLOORS EAST SIDE, INCLUDES THE FOLLOWING EQUIPMENT & THE ASSOCIATED CONTROLS, DUCTWORK, PIPING, SUPPORTS, & ACCESSORIES:

- *DEMOLITION* - (E) AC-3, (E) VAV 1-6, (E) VAV 1-8, (E) VAV 1-10, (E) VAV 1-11, (E) VAV 2-11, (E) VAV 2-12, (E) VAV 2-13, & (E) VAV 2-17
- *ROOF* - AC-3
- *CONTROLLERS ON ROOF* - AC-1, AC-2, AC-3, HU-1, HU-2, & HU-3
- *FIRST AND SECOND FLOORS* - VAV 1-6, VAV 1-8, VAV 1-10, VAV 1-11, VAV 2-11, VAV 2-12, VAV 2-13, & VAV 2-17
- *FIRST AND SECOND FLOOR THERMOSTATS* - VAV 1-6, VAV 1-8, VAV 1-10, VAV 1-11, VAV 2-11, VAV 2-12, VAV 2-13, & VAV 2-17

B. BID ALTERNATE 1:
- REPLACEMENT "IN-KIND" OF EXISTING ROOFTOP HEATING UNITS, INCLUDES THE FOLLOWING EQUIPMENT & THE ASSOCIATED CONTROLS, DUCTWORK, PIPING, SUPPORTS, & ACCESSORIES:

- *DEMOLITION* - (E) HU-1, (E) HU-2, & (E) HU-3
- *ROOF* - HU-1, HU-2, & HU-3

N

GRAPHIC SCALE
8' 0 8' 16'

NAPA COUNTY CALIFORNIA
A Tradition of Stewardship
A Commitment to Service

MK2 ENGINEERS

Green Valley Executive Center
5030 Business Center Drive,
Suite 150
Fairfield, CA 94534
(707) 759-5260
www.mk2eng.com

REGISTERED PROFESSIONAL ENGINEER
MIKE KANI
M020804
12-31-20
MECHANICAL
STATE OF CALIFORNIA

THE DRAWINGS, PLANS, SPECIFICATIONS, ELECTRONIC DATABASE AND OTHER INSTRUMENTS OF PROFESSIONAL SERVICE PREPARED BY OR ON BEHALF OF CONSULTANT SHALL BECOME THE PROPERTY OF THE OWNER UPON PAYMENT FOR SUCH WORK. THESE DRAWINGS HAVE BEEN PREPARED SPECIFICALLY FOR THIS PROJECT AND SHALL NOT BE USED FOR ANY OTHER PROJECT, BY ANY OTHER ENTITY OR IN ANY OTHER LOCATION.

811 Know what's below. Call before you dig.

CALL 811 TWO FULL BUSINESS DAYS, MAXIMUM 14 CALENDAR DAYS, BEFORE DIGGING.

No.:	Revision:	Date:
	650 IMPERIAL WAY BID SET	2020-09-24

NAPA COUNTY PUBLIC WORKS

PROJECT:
650 IMPERIAL WAY - HVAC SYSTEM UPGRADE PROJECT PW 18-03

650 IMPERIAL WAY
NAPA, CA 94559

SHEET CONTENTS:

FIRST LEVEL FLOOR PLAN HVAC MECHANICAL

BID SET

PROJECT DATE:	2020/02/05
SCALE:	AS NOTED
SHEET ISSUED DATE:	2020/09/24
APPROVED BY:	MK
DESIGN BY:	MK/SC
DRAWN BY:	DC/JH/AJ
CHECKED BY:	MK/SC
PROJECT NO.:	PW 18-03 / 20003.00

SHEET NO.:

M2.01

650 IMPERIAL WAY HVAC SYSTEM UPGRADE PW 18-03 BID SET - 2020/09/24

P:\2020\20003 - 650 IMPERIAL WAY - HVAC\DRAW\MK2-FILES\20003 - M2-01.DWG - PLOTTED BY DAVID COLEMAN

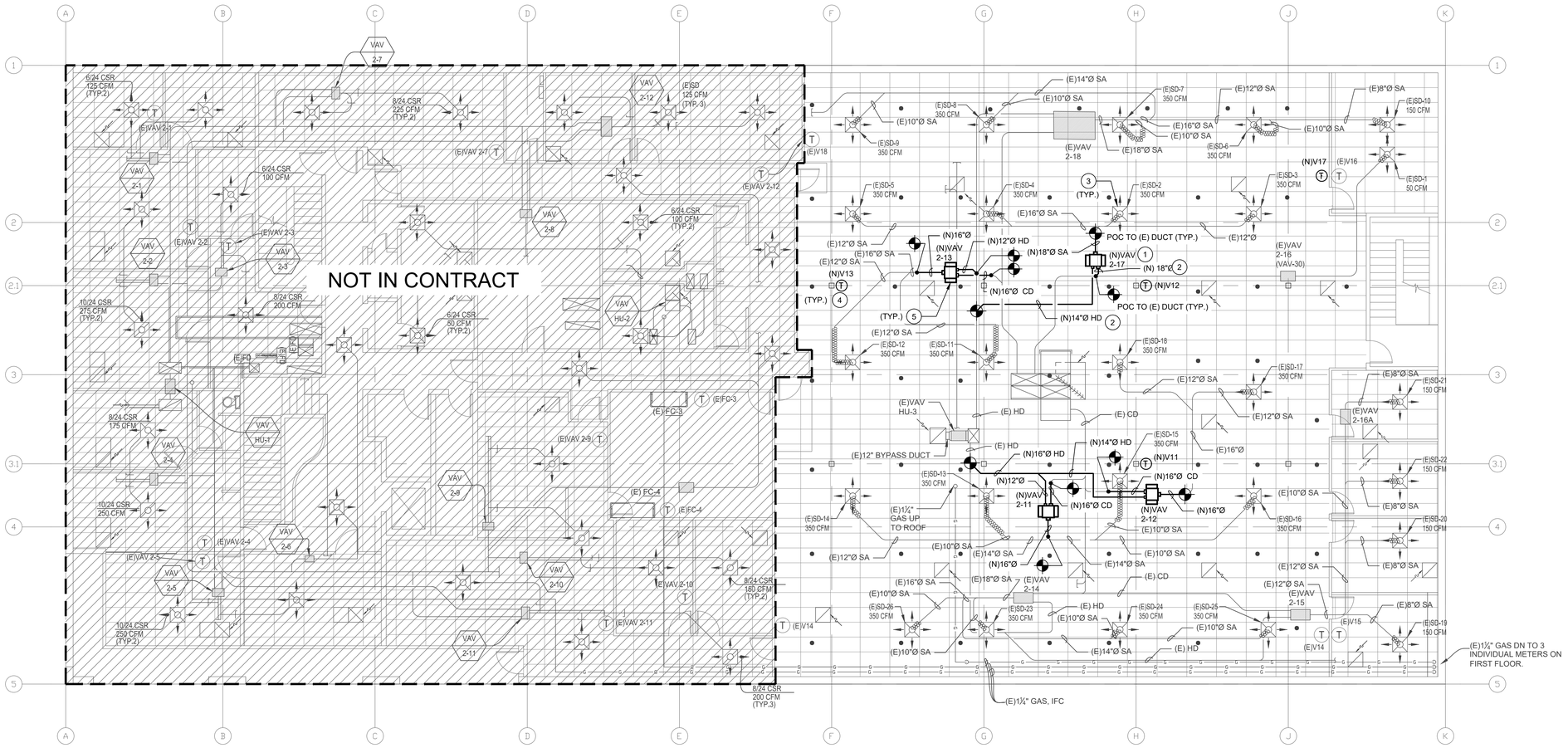

SECOND FLOOR PLAN - MECHANICAL - HVAC (1 / M2.01)

SCALE: 1/8" = 1'-0"

GENERAL NOTE:

1. LOCATIONS AND SIZES OF (E) MECHANICAL EQUIPMENT, DUCTWORK, AIR TERMINALS, ETC., ARE APPROXIMATE, BASED ON THE BEST AVAILABLE INFORMATION OBTAINABLE AT THE SITE. VERIFY EXACT LOCATIONS AND SIZES OF ALL EXISTING SYSTEMS BEFORE START OF WORK.
2. THE CONTRACTOR SHALL MEASURE, TEST, ADJUST, AND BALANCE ALL (N) AND (E) MECHANICAL EQUIPMENT, AIR TERMINALS, ETC., FOR THE ENTIRE BUILDING PER ANSI/ASHRAE STANDARD 111-2008. SEE 2007 AS-BUILT TEST AND BALANCE REPORT FOR (E) HVAC SYSTEM ON DRAWINGS M3.01 THRU M3.04.

SHEET NOTES:

1. (N) DUAL-DUCT VAV BOX, SUSPENDED FROM STRUCTURE, ABOVE CEILING. SEE SUPPORT DETAIL.
2. FOR DUCT MOUNTING, AND SUPPORT, SEE MECHANICAL DETAIL SHEETS.
3. BALANCE (E) AIR TERMINALS IN ZONES WITH (N) VAV BOXES. SEE SHEETS M3.01 THRU M3.04 FOR (E) TEST AND BALANCE REPORT ON (E) AIR TERMINALS.
4. COORDINATE FINAL THERMOSTAT LOCATION, AND MOUNTING HEIGHT WITH ENGINEER AND OWNER.
5. FOR ADDITIONAL EQUIPMENT NOTES, SEE SCHEDULES ON SHEET M0.02.

BID PACKAGE NOTES:

A. BASE BID:
- UPGRADE OF HVAC SYSTEMS SERVING FIRST AND SECOND FLOORS EAST SIDE, INCLUDES THE FOLLOWING EQUIPMENT & THE ASSOCIATED CONTROLS, DUCTWORK, PIPING, SUPPORTS, & ACCESSORIES:

- *DEMOLITION* - (E) AC-3, (E) VAV 1-6, (E) VAV 1-8, (E) VAV 1-10, (E) VAV 1-11, (E) VAV 2-11, (E) VAV 2-12, (E) VAV 2-13, & (E) VAV 2-17
- *ROOF* - AC-3
- *CONTROLLERS ON ROOF* - AC-1, AC-2, AC-3, HU-1, HU-2, & HU-3
- *FIRST AND SECOND FLOORS* - VAV 1-6, VAV 1-8, VAV 1-10, VAV 1-11, VAV 2-11, VAV 2-12, VAV 2-13, & VAV 2-17
- *FIRST AND SECOND FLOOR THERMOSTATS* - VAV 1-6, VAV 1-8, VAV 1-10, VAV 1-11, VAV 2-11, VAV 2-12, VAV 2-13, & VAV 2-17

B. BID ALTERNATE 1:
- REPLACEMENT "IN-KIND" OF EXISTING ROOFTOP HEATING UNITS, INCLUDES THE FOLLOWING EQUIPMENT & THE ASSOCIATED CONTROLS, DUCTWORK, PIPING, SUPPORTS, & ACCESSORIES:

- *DEMOLITION* - (E) HU-1, (E) HU-2, & (E) HU-3
- *ROOF* - HU-1, HU-2, & HU-3

N

GRAPHIC SCALE 8' 0 8' 16'

NAPA COUNTY CALIFORNIA

A Tradition of Stewardship
A Commitment to Service

MK2 ENGINEERS

Green Valley Executive Center
5030 Business Center Drive,
Suite 150
Fairfield, CA 94534
(707) 759-5260
www.mk2eng.com

REGISTERED PROFESSIONAL ENGINEER
M. MIKE KIANI
M020804
12-31-20
MECHANICAL
STATE OF CALIFORNIA

THE DRAWINGS, PLANS, SPECIFICATIONS, ELECTRONIC DATABASE AND OTHER INSTRUMENTS OF PROFESSIONAL SERVICE PREPARED BY OR ON BEHALF OF CONSULTANT SHALL BECOME THE PROPERTY OF THE OWNER UPON PAYMENT FOR SUCH WORK. THESE DRAWINGS HAVE BEEN PREPARED SPECIFICALLY FOR THIS PROJECT AND SHALL NOT BE USED FOR ANY OTHER PROJECT, BY ANY OTHER ENTITY OR IN ANY OTHER LOCATION.

811 Know what's below. Call before you dig.

CALL 811 TWO FULL BUSINESS DAYS, MAXIMUM 14 CALENDAR DAYS, BEFORE DIGGING.

No.:	Revision:	Date:
	650 IMPERIAL WAY BID SET	2020-09-24

NAPA COUNTY PUBLIC WORKS

PROJECT:
650 IMPERIAL WAY - HVAC SYSTEM UPGRADE
PROJECT PW 18-03

650 IMPERIAL WAY
NAPA, CA 94559

SHEET CONTENTS:

SECOND LEVEL FLOOR PLAN HVAC MECHANICAL

BID SET

PROJECT DATE:	2020/02/05
SCALE:	AS NOTED
SHEET ISSUED DATE:	2020/09/24
APPROVED BY:	MK
DESIGN BY:	MK/SC
DRAWN BY:	DC/JH/AJ
CHECKED BY:	MK/SC
PROJECT NO.:	PW 18-03 / 20003.00

SHEET NO.:

M2.02

650 IMPERIAL WAY HVAC SYSTEM UPGRADE PW 18-03 BID SET – 2020/09/24

P:\2020\20003 – 650 IMPERIAL WAY – HVAC\DRAW\MK2-FILES\20003 – M2-02.DWG – PLOTTED BY DAVID COLEMAN

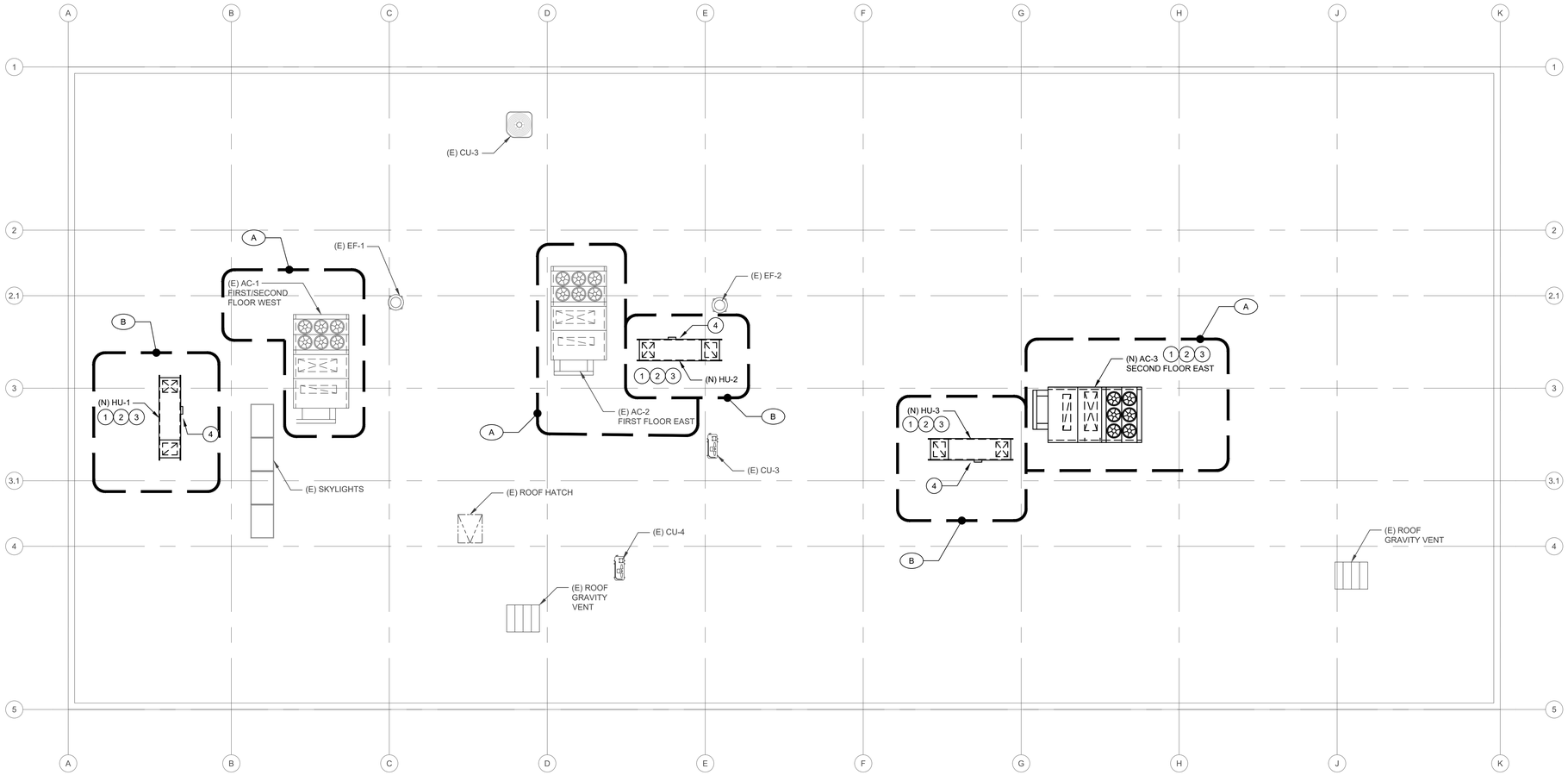

ROOF PLAN - MECHANICAL - HVAC (1 / M2.03)

SCALE: 1/8" = 1'-0"

N

GRAPHIC SCALE
8' 0 8' 16'

SHEET NOTES:

1. (N) ROOFTOP UNIT MOUNTED ON ROOF CURB, SEE DETAIL.
2. FOR UNIT CLEARANCES REFER TO MANUFACTURER'S SPECIFICATIONS AND INSTALLATION DETAILS.
3. PROVIDE SERVICE ACCESS CLEARANCE AROUND UNIT.
4. FOR PIPING, SEE PLUMBING DRAWINGS.

BID PACKAGE NOTES:

A. BASE BID:
- UPGRADE OF HVAC SYSTEMS SERVING FIRST AND SECOND FLOORS EAST SIDE, INCLUDES THE FOLLOWING EQUIPMENT & THE ASSOCIATED CONTROLS, DUCTWORK, PIPING, SUPPORTS, & ACCESSORIES:

- *DEMOLITION* - (E) AC-3, (E) VAV 1-6, (E) VAV 1-8, (E) VAV 1-10, (E) VAV 1-11, (E) VAV 2-11, (E) VAV 2-12, (E) VAV 2-13, & (E) VAV 2-17
- *ROOF* - AC-3
- *CONTROLLERS ON ROOF* - AC-1, AC-2, AC-3, HU-1, HU-2, & HU-3
- *FIRST AND SECOND FLOORS* - VAV 1-6, VAV 1-8, VAV 1-10, VAV 1-11, VAV 2-11, VAV 2-12, VAV 2-13, & VAV 2-17
- *FIRST AND SECOND FLOOR THERMOSTATS* - VAV 1-6, VAV 1-8, VAV 1-10, VAV 1-11, VAV 2-11, VAV 2-12, VAV 2-13, & VAV 2-17

B. BID ALTERNATE 1:
- REPLACEMENT "IN-KIND" OF EXISTING ROOFTOP HEATING UNITS, INCLUDES THE FOLLOWING EQUIPMENT & THE ASSOCIATED CONTROLS, DUCTWORK, PIPING, SUPPORTS, & ACCESSORIES:

- *DEMOLITION* - (E) HU-1, (E) HU-2, & (E) HU-3
- *ROOF* - HU-1, HU-2, & HU-3

NAPA COUNTY CALIFORNIA

A Tradition of Stewardship
A Commitment to Service

MK2 ENGINEERS

Green Valley Executive Center
5030 Business Center Drive,
Suite 150
Fairfield, CA 94534
(707) 759-5260
www.mk2eng.com

REGISTERED PROFESSIONAL ENGINEER
M. MIKE KIANI
M020804
12-31-20
MECHANICAL
STATE OF CALIFORNIA

THE DRAWINGS, PLANS, SPECIFICATIONS, ELECTRONIC DATABASE AND OTHER INSTRUMENTS OF PROFESSIONAL SERVICE PREPARED BY OR ON BEHALF OF CONSULTANT SHALL BECOME THE PROPERTY OF THE OWNER UPON PAYMENT FOR SUCH WORK. THESE DRAWINGS HAVE BEEN PREPARED SPECIFICALLY FOR THIS PROJECT AND SHALL NOT BE USED FOR ANY OTHER PROJECT. BY ANY OTHER ENTITY OR IN ANY OTHER LOCATION.

811 Know what's below. Call before you dig.

CALL 811 TWO FULL BUSINESS DAYS, MAXIMUM 14 CALENDAR DAYS, BEFORE DIGGING.

No.:	Revision:	Date:
	650 IMPERIAL WAY BID SET	2020-09-24

NAPA COUNTY
PUBLIC WORKS

PROJECT:
650 IMPERIAL WAY - HVAC SYSTEM UPGRADE
PROJECT PW 18-03

650 IMPERIAL WAY
NAPA, CA 94559

650 IMPERIAL WAY HVAC SYSTEM UPGRADE PW 18-03 BID SET - 2020/09/24

SHEET CONTENTS:

ROOF PLAN

HVAC
MECHANICAL
BID SET

PROJECT DATE:	2020/02/05
SCALE:	AS NOTED
SHEET ISSUED DATE:	2020/09/24
APPROVED BY:	MK
DESIGN BY:	MK/SC
DRAWN BY:	DC/JH/AJ
CHECKED BY:	MK/SC
PROJECT NO.:	PW 18-03 / 20003.00

SHEET NO.:

M2.03

P:\2020\20003 - 650 IMPERIAL WAY - HVAC\DRAW\MK2-FILES\20003 - M2-03.DWG - PLOTTED BY DAVID COLEMAN

RSAnalysis, Inc.
Environmental System Test & Balance

TEST AND BALANCE REPORT:

NAPA COUNTY
650 IMPERIAL WAY
MECHANICAL & LIGHTING IMPROVEMENTS

MECHANICAL CONTRACTOR: **BELL PRODUCTS**

MECHANICAL ENGINEER: **COSTA ENGINEERING**

PROJECT NO: 7381

DATE: 2/1/2007

TECHNICIAN: RICHARD GARCIA

TBE: MICHAEL T. RENOVICH

ASSOCIATED AIR BALANCE COUNCIL AABC TBE • 93-01-32 MICHAEL T. RENOVICH

THIS IS TO CERTIFY THAT RSANALYSIS, INC. HAS BALANCED THE SYSTEM DESCRIBED HEREIN TO THEIR OPTIMUM PERFORMANCE CAPABILITIES, UNLESS OTHERWISE NOTED IN THE PROJECT SUMMARY. THE TESTING AND BALANCING HAS BEEN PERFORMED IN ACCORDANCE WITH THE STANDARD REQUIREMENTS AND PROCEDURES OF THE ASSOCIATED AIR BALANCE COUNCIL AND THE RESULTS OF THESE TESTS ARE HEREIN RECORDED.

Corporate Office - 1035 Suncast Lane, Suite 130 - El Dorado Hills, CA 95762
Phone: 916.358.5672 - Fax: 916.358.5673

Reno, Nevada Phone: 775.323.8866
San Carlos, California Phone: 650.654.1340
Salt Lake City, Utah Phone: 801.255.5015
Seattle, Washington Phone: 206.786.7020

RSAnalysis, Inc.

AABC

Environmental System Testing and Balancing

Table of Contents

DESCRIPTION	PAGE
PERFORMANCE GUARANTEE	A
CERTIFICATE	B-C
GENERAL NOTES	D
SYMBOL SHEET	E-G
TEST & BALANCE INSTRUMENTATION	H
PROJECT SUMMARY	I
UNIT	
AC-1 / HU-1	1-6
AC-2 / HU-2	7-11
AC-3 / HU-3	12-16
(E) EXHAUST	17
SCHEMATICS	18-19

AABC National Performance Guaranty

Pursuant to the agreement between

RSAnalysis, Inc.

AABC Certified Testing & Balancing Agency

and BELL PRODUCTS
Client

All systems shall be balanced in accordance with the plans and specifications and to the optimum performance capabilities of the equipment and design. Testing and balancing shall be done in accordance with the standards published by the Associated Air Balance Council.

If for any reason, the Agency listed above fails to comply with the specifications, with the exception of termination of business by the Agency, equipment malfunction or inadequacy, or improper design, which prevents proper balancing of the systems, the Associated Air Balance Council will provide supervisory personnel to assist the Agency to perform the work in accordance with AABC Standards.

As part of this Performance Guaranty, the engineer or building owner may call upon AABC to assist him with any technical and/or field problems pertaining to the final balanced condition of systems. These services will be made available at no additional charge by the above agency or by AABC National Headquarters.

Project Name NAPA COUNTY - MECHANICAL & LIGHTING IMPROVEMENTS

Address 650 IMPERIAL WAY
NAPA, CA

Name of Engineer CHRIS DEL CORE

Engineering Firm COSTA ENGINEERING

Address 3274 VILLA LANE
NAPA, CA 94558

Date 01/22/07

TBE # 93-01-32

By AABC Certified TBE MICHAEL T. RENOVICH

AABC
Associated Air Balance Council
1518 K Street, N.W.
Washington, D.C. 20005
202-737-0202 • Fax 202-638-4833
aabchq@aol.com • www.aabchq.com

AABC
Associated Air Balance Council

Annual Certificate

Awarded to

Michael T. Renovich

RS Analysis, Inc.

In recognition of his qualifications as a

Certified Test and Balance Engineer

under the rules, regulations, and requirements of the Associated Air Balance Council. The above named is fully authorized to perform total system balance in accordance with the standards as established by the AABC and as a member of the Associated Air Balance Council for the year

2006

This registration number 93-01-32 is fully recognized by the bylaws and charter of this professional association. Certification is renewable on an annual basis after examination of the agency's record for the preceding year. This certificate expires December 31, 2006.

ASSOCIATED AIR BALANCE COUNCIL AABC 2006

President

Executive Director

AABC
Associated Air Balance Council

hereby certifies that

Richard M. Garcia

has met all requirements and passed the necessary examination to perform testing and balancing as an AABC

Certified Test & Balance Technician

under the supervision of a certified test and balance engineer for

RS Analysis, Inc.

This registration number 151-01-05 is only recognized under the auspices of the above named AABC member agency. This certificate expires December 31, 2006 and is renewable on an annual basis.

Executive Director

President

GENERAL NOTES

1. CORRECTION FOR TEMPERATURE AND ALTITUDE HAVE BEEN MADE ON ALL TEST RESULTS SHOWN IN THIS REPORT.
2. CEILING DIFFUSERS WERE MEASURED WITH A DIRECT CFM READ-OUT METER. (SEE CALIBRATION SHEET).
3. OUTLETS FOR THE FANS WERE NUMBERED WITH CLOSEST TO THE FAN AS #1.
4. THE VAV TERMINAL UNITS WERE TESTED ON MAXIMUM CFM DEMAND. WHEN TOTAL CFM OF THE TERMINAL UNITS EXCEEDED THE FAN TOTAL, A PORTION OF THE TERMINAL UNITS WERE TURNED DOWN TO EQUAL THE DESIGN CFM OF THE FAN. DATA SHOWN IN MOTOR AND FAN TESTED COLUMN OF THE FAN TEST SHEET WAS TAKEN IN THE TURN DOWN (DIVERSITY) CONDITION. SEE FAN SHEET FOR THE EXACT AMOUNT OF DIVERSITY.
5. STATIC CONTROL PRESSURE (SCP) IS THE MINIMUM AMOUNT OF STATIC PRESSURE REQUIRED TO OPERATE THE FARTHEST TERMINAL UNIT AT DESIGN CONDITION WHEN THE SYSTEM IS SET UP FOR DESIGN CFM AT THE FAN.
6. ALL CORRECTIONS FOR INSTRUMENTS USED FOR TESTING AND BALANCING ARE TRACEABLE BACK TO THE NATIONAL BUREAU OF STANDARDS AND ARE TESTED IN OUR OWN LAB.

SYMBOL SHEET

AHU	AIR HANDLING UNIT
AC OR ACU	AIR CONDITIONER UNIT
ACCU	AIR COOLED CONDENSING UNIT
ADJ P.D.	ADJUSTED PITCH DIAMETER
AMP	AMPERERE
AVG	AVERAGE
B.H.P.	BRAKE HORSEPOWER
C.D.	CEILING DIFFUSER
CFM	CUBIC FEET PER MINUTE
C.E.	CEILING EXHAUST
CEF	CEILING EXHAUST FAN
CH	CHILLER
CHWR	CHILLED WATER RETURN
CHW OR CHWS	CHILLED WATER SUPPLY
C.R.	CEILING RETURN
CT	COOLING TOWER
CWR	CONDENSER WATER RETURN
CW OR CWS	CONDENSER WATER SUPPLY
DB	DRY BULB
D.D.	DIRECT DRIVE
D.P.	DIFFERENCE, NET DECREASE OR INCREASE
DIA	DIAMETER
D.N.A.	DATA NOT AVAILABLE
D.N.L	DATA NOT LISTED
EAT	ENTERING AIR TEMPERATURE
EDC	ELECTRIC DUCT COIL
EDH	ELECTRIC DUCT HEATER
EF	EXHAUST FAN
EMCS	ENERGY MANAGEMENT CONTROL SYSTEM (S)
EWT	ENTERING WATER TEMPERATURE
FCU	FAN COIL UNIT
F.D.	FLOOR DIFFUSER
FH	FUME HOOD
FG	FLOOR GRILLE
F.E.	FLOOR EXHAUST OR RETURN
F.L.A	FULL LOAD AMPERAGE
FPB	FAN POWERED BOX
FPM	FEET PER MINUTE
F.S.	FLOOR SUPPLY
F.S.R	FLOOR SUPPLY REGISTER
FT. HD	FEET OF HEAD
FTU	FAN TERMINAL UNIT
GPM	GALLONS PER MINUTE
GFH	GAS FIRED HEATER
[illegible]	GAS FIRED HEATING COIL
HC	HEATING COIL
HEATER O.L.	THERMAL OVERLOAD PROTECTION FOR MOTORS LOCATED AT THE MOTOR STARTER
HEPA	HIGH EFFICIENCY PARTICULATE ARRESTANCE
H.F.	HEPA FILTER
HOA	HAND/OFF/AUTO SWITCH
H.P.	HORSEPOWER
HPS	HIGH PRESSURE STEAM
HRC	HEAT RECOVERY COIL OR HEAT RECLAIM COIL
HVAC	HEATING , VENTILATION AND AIR CONDITIONING
HWR	HOT WATER RETURN OR HEATING WATER RETURN
HWS	HOT WATER SUPPLY OR HEATING WATER SUPPLY
HX	HEAT EXCHANGER
I.D.	INSIDE DIAMETER
LAT	LEAVING AIR TEMPERATURE
L.D.	LINEAR SUPPLY DIFFUSER
LPS	LOW PRESSURE STEAM
L.T.	LIGHT TROFFER
LWG	LOW WALL GRILLE
LWR	LOW WALL RETURN
LWT	LEAVING WATER TEMPERATURE
MAU/MUA	MAKE UP AIR UNIT
MBH	1,000 BTU'S PER HOUR
N.A.	NOT ACCESSIBLE
N.I.	NOT INSTALLED
N.T.	NOT TAKEN
N.V.L	NO VALID LOCATION
N.Z.	NOZZLE
O.D.	OUTSIDE DIAMETER
OPEN	NO TERMINAL DEVICE INSTALLED
O.S.A. MIN	OUTSIDE AIR MINIMUM
OAT	OUTSIDE AIR TEMPERATURE
PF	POWER FACTOR
PHC	PREHEAT COIL
PHC	PHASE (S)
PMP	CIRCULATING PUMP
P.P	PERFORATED PLATE
PSI	POUNDS PER SQUARE INCH
P.T.	PITOT TRAVERSE
RA	RETURN AIR
RF	RETURN AIR FAN
R.G.	RETURN GRILLE
RHC	REHEAT COIL
[illegible]	REVOLUTIONS PER MINUTE

NAPA COUNTY CALIFORNIA

A Tradition of Stewardship
A Commitment to Service

MK2 ENGINEERS

Green Valley Executive Center
5030 Business Center Drive,
Suite 150
Fairfield, CA 94534
(707) 759-5260
www.mk2eng.com

REGISTERED PROFESSIONAL ENGINEER M. MIKE KIANI M030804 12-31-20 MECHANICAL STATE OF CALIFORNIA

THE DRAWINGS, PLANS, SPECIFICATIONS, ELECTRONIC DATABASE AND OTHER INSTRUMENTS OF PROFESSIONAL SERVICE PREPARED BY OR ON BEHALF OF CONSULTANT SHALL BECOME THE PROPERTY OF THE OWNER UPON PAYMENT FOR SUCH WORK. THESE DRAWINGS HAVE BEEN PREPARED SPECIFICALLY FOR THIS PROJECT AND SHALL NOT BE USED FOR ANY OTHER PROJECT, BY ANY OTHER ENTITY OR IN ANY OTHER LOCATION.

811 Know what's below. Call before you dig.

CALL 811 TWO FULL BUSINESS DAYS, MAXIMUM 14 CALENDAR DAYS, BEFORE DIGGING.

No.:	Revision:	Date:
	650 IMPERIAL WAY BID SET	2020-09-24

NAPA COUNTY PUBLIC WORKS

PROJECT:
650 IMPERIAL WAY - HVAC SYSTEM UPGRADE PROJECT PW 18-03

650 IMPERIAL WAY
NAPA, CA 94559

SHEET CONTENTS:
2007 AS-BUILT TEST AND BALANCE REPORT REFERENCE ONLY MECHANICAL
BID SET

PROJECT DATE:	2020/02/05
SCALE:	AS NOTED
SHEET ISSUED DATE:	2020/09/24
APPROVED BY:	MK
DESIGN BY:	MK/SC
DRAWN BY:	DC/JH/AJ
CHECKED BY:	MK/SC
PROJECT NO.:	PW 18-03 / 20003.00

650 IMPERIAL WAY HVAC SYSTEM UPGRADE PW 18-03 BID SET - 2020/09/24

SHEET NO.:
M3.01

P:\2020\20003 – 650 IMPERIAL WAY – HVAC\DRAW\MK2-FILES\20003 – M3-01.DWG – PLOTTED BY DAVID COLEMAN

SA	SUPPLY AIR
SAT	SUPPLY AIR TEMPERATURE
S.D.	SUPPLY DIFFUSER
SEF	SMOKE EXHAUST FAN
SF (AIR)	SUPPLY FAN
S.F. (ELECT)	SERVICE FACTORS
SHC	STEAM HEATING COIL
S.P. "W.C."	STATIC PRESSURE RESISTANCE, MEASURED IN INCHES OF WATER COLUMN
S.W.E.	SIDEWALL EXHAUST
S.W.R.	SIDEWALL RETURN
S.W.S.	SIDEWALL SUPPLY
TAB	TESTING, ADJUSTING, AND BALANCING
TSP	TOTAL STATIC PRESSURE
UH	UNIT HEATER
V	VOLTS
VAV	VARIABLE AIR VOLUME
VD	VOLUME DAMPER
VFD	VARIABLE FREQUENCY DRIVE
VP	VELOCITY PRESSURE
W	WATTS
WB	WET BULB
W.G.	WATER GAUGE
F	DEGREES FAHRENHEIT
ΔP	DIFFERENTIAL (DELTA) PRESSURE OR PRESSURE DROP
ΔT	DIFFERENTIAL (DELTA) TEMPERATURE, NET TEMPERATURE DECREASE OR INCREASE
#	POUNDS PER SQUARE INCH

RSAnalysis, Inc.

AABC

TEST & BALANCE INSTRUMENTATION

TECHNICIAN: RICHARD GARCIA

☑ THE FOLLOWING CHECKED INSTRUMENTS WERE USED TO SUCCESSFULLY MEASURE AND SET EACH DEVICE ON THIS PROJECT.

INSTRUMENT	MANUFACTURER	MODEL	SERIAL NO.	CALIBRATION DATE
☑ FLOW HOOD	SHORTRIDEG/DIGITAL	8403	N/A	N/A
☐ RVA	ALNOR	RVA+	70534118	5/24/2006
☑ AMPROBE	FLUKE	334	79617441	5/24/2006
☑ TACHOMETER	JAQUET	752	736169	5/24/2006
☑ AIR DATA MULTIMETER	SHORTRIDGE	ADM 860C	M04260	4/20/2006
☐ HYDRONIC MANOMETER				

PROJECT SUMMARY

1. AC-1, AC-2, AC-3, HU-1, HU-2 & HU-3 SERVE SINGLE DUCT AND DUAL DUCT VARIABLE AIR VOLUME BOXES WITH SIEMENS DIRECT DIGITAL CONTROLS. THE HU'S (GAS FIRED HEATING UNITS) SUPPLY THE HOT DUCT PORTION OF THE DUAL DUCT ZONES.

2. AC-1/HU-1 & AC-2/HU-2 ASSOCIATE VAV BOXES ARE NEW. THE SINGLE DUCT (COOLING ONLY) VAV'S WERE CALIBRATED AND BALANCED TO THE SCHEDULE SPECIFICATIONS. THE DUAL DUCT BOXES WERE CALIBRATED AND BALANCED AS PER THE FOLLOWING SEQUENCE.

A. FULL COOL DEMAND: HOT DECK FULL CLOSED AND VOLUME SET AS PER DESIGN.

B. FULL HEAT DEMAND: COLD DECK SET TO 30% OF MAXIMUM DESIGN. THIS VALUE WILL ALLOW THE MINIMUM OUTSIDE REQUIREMENT TO BE ACHIEVED. HOT DECK CFM IS SET TO 50% OF COOLING MAXIMUM DESIGN.

C. ALL MINIMUM OUTSIDE IS SUPPLIED FROM THE AC UNIT. THE HEATING UNITS ARE 100% RETURN AIR SYSTEMS.

3. THE AC UNIT VARIABLE FREQUENCY DRIVES ARE CONTROLLED BY MAINTAINING THE SUPPLY DUCT SYSTEM STATIC PRESSURE. THE HEATING UNIT VFD'S REMAIN AT A CONSTANT SPEED AND THERE IS BYPASS DUCT THAT WILL MAINTAIN A CONSTANT SUPPLY DUCT STATIC PRESSURE.

4. AC-3/HU-3 SUPPLY EXISTING VAV BOXES. THE SIEMENS CONTROL LOGIC FOR THE DOUBLE DUCT BOXES IS DIFFERENT THEN THE NEW ZONES. THE ACTUAL CFM BETWEEN HEATING AND COOLING IS MONITORED AND CONTROLLED AT VELOCITY PRESSURE SENSORS LOCATED IN THE COMMON SUPPLY DUCT. EACH ZONE WAS VALIDATED TO ENSURE THE BOX WOULD DRIVE TO A FULL COOL/FULL HEAT DEMAND UPON COMMAND VIA TEMPERATURE SETPOINT. THE AREA SERVED BY THESE UNITS WAS COMFORTABLE AND ALL TENANTS WERE SATISFIED.

5. EXISTING EXHAUST FANS EF-1 & EF-2 SERVING THE TOILETS ARE BELT DRIVEN SINGLE PHASE FANS. BOTH UNITS WERE RUNNING BACKWARDS. WE WERE ABLE TO REVERSE ROTATION AND PRESENTLY THERE APPEARS TO BE ADEQUATE AIRFLOW FOR THESE SYSTEMS. EACH BATHROOM EXHAUST CAPACITY EXCEEDS THE SUPPLY VOLUME. IT IS RECOMMENDED EF-2 BELT SHOULD BE REPLACED.

RSAnalysis, Inc.

AABC

DATE 12/13/06
PAGE 7
UNIT AH-2

AIR MOVING EQUIPMENT DATA

AREA SERVED 1ST FLOOR HOT DECK

FAN	AH-2
EQUIP. LOCATION	ROOF
TYPE / SIZE	ROOFTOP PACKAGE

EQUIPMENT MFG.	CARRIER
MODEL	50PG-C28FD-50-LY
SERIAL NUMBER	3506G10024

FAN DATA

	SPECIFIED	ACTUAL
TOTAL CFM- FAN	10,000	9735
TOTAL CFM - OUTLET	9600	9735
R/A CFM	7600	7580
O/A CFM	2000	2165
FAN RPM	1298	1098
ESP	1.40	1.62
INLET SP	0.31	
DISCHARGE SP	1.31	
FILTER ΔP	DNA	
SCP	1.25	

FAN SHEAVE	2BK80
FAN SHAFT	1-3/16"
SHAFT C / C	10-3/8"
BELT SIZE / NUMBER	BX38/2
MOTOR SHEAVE	2VP60
MOTOR SHAFT	1-3/8"
SHEAVE ADJ.	MID
FIXED SHEAVE	☐ -

MOTOR DATA

MOTOR MFG.	CENTURY
MOTOR HP	10
SERVICE FACTOR	1.15
PHASE / Hz	3/60
HEATER SIZE / RATING	-
MOTOR FRAME#	S215T

	SPECIFIED	ACTUAL
VOLTAGE	208	200/201/201
AMPERAGE	26.8	24.9/25.2/25.1
MOTOR BHP	10.39	9.4
MOTOR RPM	1745	1708
SPEED VFD	60 HZ	58 HZ

STATIC FAN PROFILE

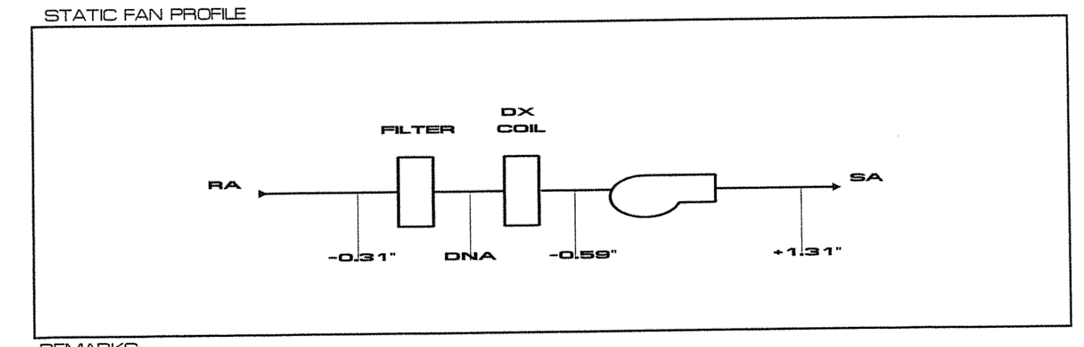

REMARKS:

7382

RSAnalysis, Inc.

AABC

DATE 12/13/06
PAGE 8
UNIT HU-2

AIR MOVING EQUIPMENT DATA

AREA SERVED 1ST FLOOR HOT DECK

FAN	HU-2
EQUIP. LOCATION	ROOF
TYPE / SIZE	GAS FURNACE

EQUIPMENT MFG.	REZNOR
MODEL	RDH175
SERIAL NUMBER	BFJ79Y2N20556X

FAN DATA

	SPECIFIED	ACTUAL
TOTAL CFM- FAN	2400	2360
TOTAL CFM - OUTLET	2300	2360
R/A CFM	100%	100%
O/A CFM	-	-
FAN RPM	1106	851
TSP	1.25	0.93
INLET SP	0.11	
DISCHARGE SP	0.82	
FILTER ΔP	0.03	
SCP	1.0	

FAN SHEAVE	5-1/4" O.D.
FAN SHAFT	1"
SHAFT C / C	17-1/2"
BELT SIZE / NUMBER	(1)
MOTOR SHEAVE	3-3/4" O.D.
MOTOR SHAFT	7/8"
SHEAVE ADJ.	MID
FIXED SHEAVE	☐ -

MOTOR DATA

MOTOR MFG.	CENTURY
MOTOR HP	2
SERVICE FACTOR	1.15
PHASE / Hz	3/60
HEATER SIZE / RATING	-
MOTOR FRAME#	PA56HZ

	SPECIFIED	ACTUAL
VOLTAGE	208	151/151/150
AMPERAGE	6.6	4.0/4.0/4.2
MOTOR BHP	1.61	1.24
MOTOR RPM	1725	1487
SPEED VFD	60 HZ	50 HZ

TEMPERATURE DATA

COOLING	EAT	-	LAT	-
HEATING	EAT	73.9	LAT	102.1

STATIC FAN PROFILE

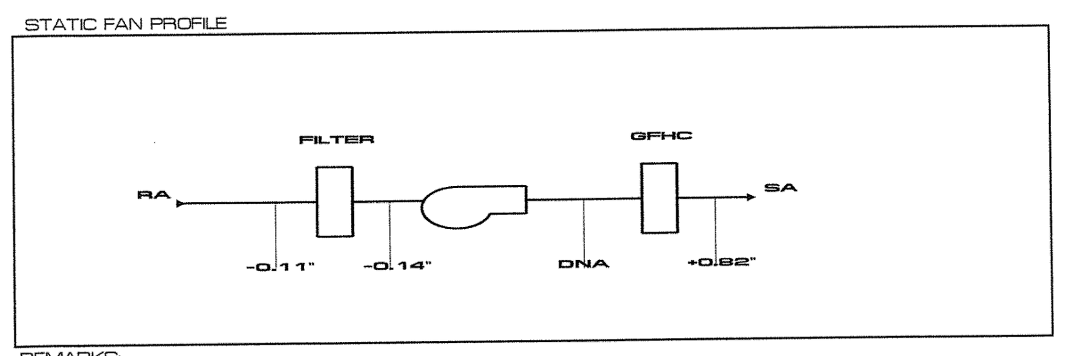

REMARKS:
(1) ADJUSTABLE LINK BELT.

RSAnalysis, Inc.

AABC

DATE 12/15/06
PAGE 9
UNIT AC-2 / HV-2

VAV SUMMARY SHEET

CONSTANT ☐ VARIABLE ☐ SINGLE X DUAL X

TERMINAL UNIT	CD / HD SIZE	CD / HD FLOW COEF.	COOLING DESIGN CFM MIN	COOLING DESIGN CFM MAX	COOLING ACTUAL CFM MIN	COOLING ACTUAL CFM MAX	HEATING DESIGN CFM	HEATING ACTUAL CFM
VAV-1-5	10"/10"	0.63/0.63	270	900	290	920	450	460
VAV-1-6	7"	0.82	180	600	195	625	NA	NA
VAV-1-7	6"/6"	0.6/0.6	90	300	95	315	150	150
VAV-1-8	5"	0.61	90	300	100	300	NA	NA
VAV-1-9	12"/12"	0.6/0.65	450	1500	455	1510	750	785
VAV-1-10	12"	0.73	560	1875	570	1880	NA	NA
VAV-1-11	14"	0.67	675	2250	690	2295	NA	NA
VAV-1-12	12"/12"	0.68/0.7	560	1875	570	1900	950	890

REMARKS:

RSAnalysis, Inc.

AABC

DATE 12/15/06
PAGE 10
UNIT AC-2 / HV-2

DIFFUSER AND GRILLE TEST SHEET

FLOOR	OUTLET NO.	CODE	SIZE	EFFECTIVE AREA	DESIGN FPM	DESIGN CFM	INITIAL CFM	FINAL FPM	FINAL CFM
1ST	1	CD	0624			150	65		140
1ST	2	CD	0624			150	75		160
TOTAL VAV-1-8						**300**	**140**		**300**
1ST	3	CD	24X24			375	340		365
1ST	4	CD	24X24			375	335		365
1ST	5	CD	24X24			375	395		385
1ST	6	CD	24X24			375	460		380
1ST	7	CD	24X25			375	405		385
TOTAL VAV-1-10						**1875**	**1935**		**1880**
1ST	8	CD	0624			100	100		100
1ST	9	CD	0624			100	105		105
1ST	10	CD	0624			100	110		110
TOTAL VAV-1-7						**300**	**315**		**315**
1ST	11	CD	1024			375	215		365
1ST	12	CD	1024			375	315		375
1ST	13	CD	1024			375	490		380
1ST	14	CD	1024			375	510		390
TOTAL VAV-1-9						**1500**	**1530**		**1510**
1ST	15	CD	0824			300	300		310
1ST	16	CD	0824			300	455		305
1ST	17	CD	0824			300	195		315
TOTAL VAV-1-5						**900**	**950**		**930**
1ST	18	CD	0824			300	200		310
1ST	19	CD	0824			300	200		315
TOTAL VAV-1-6						**600**	**400**		**625**

REMARKS:

7382

RSAnalysis, Inc.

AABC

DATE 12/15/06
PAGE 11
UNIT AC-2 / HV-2

DIFFUSER AND GRILLE TEST SHEET

FLOOR	OUTLET NO.	CODE	SIZE	EFFECTIVE AREA	DESIGN FPM	DESIGN CFM	INITIAL CFM	FINAL FPM	FINAL CFM
1ST	20	CD	1024			375	275		400
1ST	21	CD	1024			375	315		380
1ST	22	CD	1024			375	420		375
1ST	23	CD	1024			375	450		390
1ST	24	CD	1024			375	545		380
1ST	25	CD	1024			375	440		370
TOTAL VAV-1-11						**2250**	**2445**		**2295**
1ST	26	CD	1024			375	270		380
1ST	27	CD	1024			375	380		390
1ST	28	CD	1024			375	290		370
1ST	13	CD	1024			375	345		385
1ST	14	CD	1024			375	300		375
TOTAL VAV-1-12						**1875**	**1585**		**1900**

REMARKS:

7382

NAPA COUNTY CALIFORNIA

A Tradition of Stewardship
A Commitment to Service

MK2 ENGINEERS

Green Valley Executive Center
5030 Business Center Drive,
Suite 150
Fairfield, CA 94534
(707) 759-5260
www.mk2eng.com

REGISTERED PROFESSIONAL ENGINEER M. MIKE KIANI M030804 12-31-20 MECHANICAL STATE OF CALIFORNIA

THE DRAWINGS, PLANS, SPECIFICATIONS, ELECTRONIC DATABASE AND OTHER INSTRUMENTS OF PROFESSIONAL SERVICE PREPARED BY OR ON BEHALF OF CONSULTANT SHALL BECOME THE PROPERTY OF THE OWNER UPON PAYMENT FOR SUCH WORK. THESE DRAWINGS HAVE BEEN PREPARED SPECIFICALLY FOR THIS PROJECT AND SHALL NOT BE USED FOR ANY OTHER PROJECT, BY ANY OTHER ENTITY OR IN ANY OTHER LOCATION.

811 Know what's below. Call before you dig. CALL 811 TWO FULL BUSINESS DAYS, MAXIMUM 14 CALENDAR DAYS, BEFORE DIGGING.

No.:	Revision:	Date:
	650 IMPERIAL WAY BID SET	2020-09-24

NAPA COUNTY PUBLIC WORKS

PROJECT:
650 IMPERIAL WAY - HVAC SYSTEM UPGRADE PROJECT PW 18-03

650 IMPERIAL WAY
NAPA, CA 94559

SHEET CONTENTS:
2007 AS-BUILT TEST AND BALANCE REPORT REFERENCE ONLY MECHANICAL
BID SET

PROJECT DATE:	2020/02/05
SCALE:	AS NOTED
SHEET ISSUED DATE:	2020/09/24
APPROVED BY:	MK
DESIGN BY:	MK/SC
DRAWN BY:	DC/JH/AJ
CHECKED BY:	MK/SC
PROJECT NO.:	PW 18-03 / 20003.00

650 IMPERIAL WAY HVAC SYSTEM UPGRADE PW 18-03 BID SET - 2020/09/24

SHEET NO.:
M3.02

RSAnalysis, Inc.

AABC

DATE 12/13/06
PAGE 12
UNIT AH-3

AIR MOVING EQUIPMENT DATA

AREA SERVED 2ND FLOOR EAST

FAN	AH-3
EQUIP. LOCATION	ROOF
TYPE / SIZE	ROOFTOP PACKAGE

EQUIPMENT MFG.	CARRIER
MODEL	50PG-C28PC-50-LY
SERIAL NUMBER	3506G10023

FAN DATA

	SPECIFIED	ACTUAL
TOTAL CFM- FAN	8000	8435
TOTAL CFM - OUTLET	7600	8435
R/A CFM	5800	6385
O/A CFM	2000	2250
FAN RPM	1076	1060
ESP	1.40	1.69
INLET SP	0.15	
DISCHARGE SP	1.54	
FILTER ΔP	DNA	
SCP	1.5	

FAN SHEAVE	BK95H
FAN SHAFT	1-3/16"
SHAFT C / C	10-1/2"
BELT SIZE / NUMBER	BX42/1
MOTOR SHEAVE	1VP65
MOTOR SHAFT	1-3/8"
SHEAVE ADJ.	MID
FIXED SHEAVE	☐ -

MOTOR DATA

MOTOR MFG.	CENTURY
MOTOR HP	7-1/2
SERVICE FACTOR	1.15
PHASE / Hz	3/60
HEATER SIZE / RATING	-
MOTOR FRAME#	S213T

	SPECIFIED	ACTUAL
VOLTAGE	208	194/195/195
AMPERAGE	19.4	15.7/15.9/15.9
MOTOR BHP	5.73	5.12
MOTOR RPM	1745	1691
SPEED VFD	60 HZ	57 HZ

STATIC FAN PROFILE

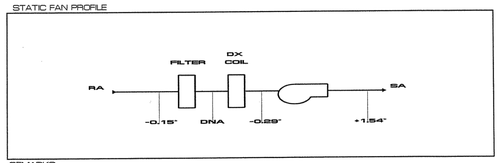

REMARKS:

7/99

RSAnalysis, Inc.

AABC

DATE 12/13/06
PAGE 13
UNIT HU-3

AIR MOVING EQUIPMENT DATA

AREA SERVED 2ND FLOOR EAST

FAN	HU-3
EQUIP. LOCATION	ROOF
TYPE / SIZE	GAS FURNACE

EQUIPMENT MFG.	REZNOR
MODEL	RDH200
SERIAL NUMBER	BFJ79Y2N05586X

FAN DATA

	SPECIFIED	ACTUAL
TOTAL CFM- FAN	3000	2535
TOTAL CFM - OUTLET	1775	2535
R/A CFM	100%	100%
O/A CFM	-	-
FAN RPM	1106	891
TSP	1.25	1.0
INLET SP	0.07	
DISCHARGE SP	0.93	
FILTER ΔP	0.06	
SCP	1.0	

FAN SHEAVE	5-1/4" O.D.
FAN SHAFT	1"
SHAFT C / C	17-3/4"
BELT SIZE / NUMBER	(1)
MOTOR SHEAVE	3-3/4" O.D.
MOTOR SHAFT	7/8"
SHEAVE ADJ.	MID
FIXED SHEAVE	☐ -

MOTOR DATA

MOTOR MFG.	CENTURY
MOTOR HP	2
SERVICE FACTOR	1.15
PHASE / Hz	3/60
HEATER SIZE / RATING	-
MOTOR FRAME#	PA56HZ

	SPECIFIED	ACTUAL
VOLTAGE	208	178/177/177
AMPERAGE	6.8	4.1/4.2/4.1
MOTOR BHP	1.61	1.25
MOTOR RPM	1725	1491
SPEED VFD	60 HZ	50 HZ

TEMPERATURE DATA

COOLING	EAT	-	LAT	-
HEATING	EAT	71.1	LAT	102.2

STATIC FAN PROFILE

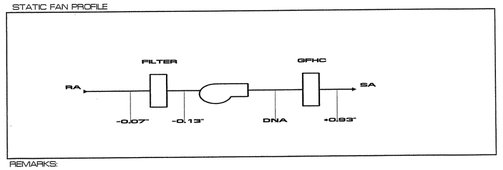

REMARKS:
(1) ADJUSTABLE LINK BELT.

RSAnalysis, Inc.

AABC

DATE 12/15/06
PAGE 14
UNIT AC-3 / HV-3

VAV SUMMARY SHEET

CONSTANT		VARIABLE	X	SINGLE	X	DUAL	X

CD / TOTAL			COOLING				HEATING	
TERMINAL UNIT	SIZE	FLOW COEF.	DESIGN CFM MIN	DESIGN CFM MAX	ACTUAL CFM MIN	ACTUAL CFM MAX	DESIGN CFM	ACTUAL CFM
(E) VAV-11	12"	0.54	420	1400	435	1405	NA	NA
(E) VAV-12	9"	0.55	210	700	220	710	NA	NA
(E) VAV-13	9"	0.56	210	700	225	730	NA	NA
(E) VAV-14	14"/20"	0.63/0.7	420	1400	435	1400	700	720
(E) VAV-15	16"(1)	0.58	180	600	-	520	300	600
(E) VAV-16	10"	0.65	110	550(2)	115	555	NA	NA
(E) VAV-17	12"	0.5	420	1400	430	1405	NA	NA
(E) VAV-18	20"(1)	(2)	465	1550	-	1710	775	1215

REMARKS:
CD COLD DUCT TOTAL: TOTAL COMMON SUPPLY DUCT VELOCITY PRESSURE SENSOR.
VAV-15 & 18 HAVE A DIFFERENT CONTROL CONFIGURATION. COMMON DISCHARGE VP ONLY.
(1) TOTAL FLOW / COMMON DISCHARGE DUCT VELOCITY PRESSURE LOCATION.
(2) UNABLE TO READ SIEMENS PARAMETERS ON COMPUTER.
(3) INITIAL DESIGN CFM WAS SET @ 625 CFM. ROOM WAS COMFORTABLE IN FULL AUTO. CHANGED MAX DESIGN CFM TO 550 FOR NOISE PURPOSE.

RSAnalysis, Inc.

AABC

DATE 12/15/06
PAGE 15
UNIT AC-3 / HV-3

DIFFUSER AND GRILLE TEST SHEET

FLOOR	OUTLET NO.	CODE	SIZE	EFFECTIVE AREA	DESIGN FPM	DESIGN CFM	INITIAL CFM	FINAL FPM	FINAL CFM
2ND	1	CD	24X24			550	590		555
TOTAL (E) VAV-15						550	590		555
2ND	2	CD	24X24			350	325		335
2ND	3	CD	24X24			350	240		370
2ND	4	CD	24X24			350	350		340
2ND	5	CD	24X24			350	285		360
TOTAL (E) VAV-17						1400	1180		1405
2ND	6	CD	24X24			350	450		450
2ND	7	CD	24X24			350	360		360
2ND	8	CD	24X24			350	390		390
2ND	9	CD	24X24			350	220		220
2ND	10	CD	24X24			350	290		290
TOTAL (E) VAV-18						1550	1710		1710
2ND	11	CD	24X24			350	450		380
2ND	12	CD	24X24			350	275		350
TOTAL (E) VAV-13						700	725		730
2ND	13	CD	24X24			350	395		370
2ND	14	CD	24X24			350	395		345
2ND	15	CD	24X24			350	305		355
2ND	16	CD	24X24			350	290		335
TOTAL (E) VAV-11						1400	1375		1405
2ND	17	CD	24X24			350	340		340
2ND	18	CD	24X24			350	370		370
TOTAL (E) VAV-12						700	710		710

REMARKS:

RSAnalysis, Inc.

AABC

DATE 12/15/06
PAGE 16
UNIT AC-3 / HV-3

DIFFUSER AND GRILLE TEST SHEET

FLOOR	OUTLET NO.	CODE	SIZE	EFFECTIVE AREA	DESIGN FPM	DESIGN CFM	INITIAL CFM	FINAL FPM	FINAL CFM
2ND	19	CD	24X24			200	305/250		250
2ND	20	CD	24X24			200	230/220		220
2ND	21	CD	6"			200	60/50		50(1)
TOTAL (E) VAV-15						600	655/520		520
	22	CD	24X24			200			(2)
TOTAL (E) VAV-16A						200			(2)
2ND	23	CD	24X24			350	305		435
2ND	24	CD	24X24			350	285		410
2ND	25	CD	6X6			350(1)	105		150
2ND	26	CD	24X24			350	280		405
TOTAL (E) VAV-14						1400	975		1400

REMARKS:
(1) THIS ZONE HAS BEEN REVISED. PRESENTLY 6" DUCT TO A SMALL DIFFUSER (OUTLET #21). NO VOLUME DAMPERS IN EXISTING DUCT SUPPLYING OUTLETS #19 & 20.
(2) EXISTING DOUBLE DUCT VAV-16A IS NOT SHOWN ON DRAWINGS. THE FLEX CONNECTION TO CEILING DIFFUSER IS SPLIT IN HALF.

RSAnalysis, Inc.

AABC

DATE 01/22/07
PAGE 17
UNIT (E) EXHAUST TOILETS

DIFFUSER AND GRILLE TEST SHEET

ROOM	OUTLET NO.	CODE	SIZE	EFFECTIVE AREA	DESIGN FPM	DESIGN CFM	INITIAL CFM	FINAL FPM	FINAL CFM
2ND FL. MEN	1	CE	12X12			DNL	70		260
2ND FL. WOM	2	CE	12X12			DNL	60		240
2ND FL. WOM	3	CE	12X12			DNL	65		205
2ND FL. MEN	4	CE	12X12			DNL	55		230
1ST FL. WOM	5	CE	12X12			DNL	50		185
1ST FL. MEN	6	CE	12X12			DNL	60		240
1ST FL. WOM	7	CE	12X12			DNL	25		55
1ST FL. MEN	8	CE	12X12			DNL	40		65
TOTAL EXHAUST						DNL	425		1480

REMARKS:

RSAnalysis, Inc.

AABC

DATE 12/13/06
PAGE 1
UNIT AH-1

AIR MOVING EQUIPMENT DATA

AREA SERVED 1ST & 2ND FLOOR OFFICE

FAN	AH-1
EQUIP. LOCATION	ROOF
TYPE / SIZE	ROOFTOP PACKAGE

EQUIPMENT MFG.	CARRIER
MODEL	50PG-C28PC-50-LY
SERIAL NUMBER	3506G10022

FAN DATA

	SPECIFIED	ACTUAL
TOTAL CFM- FAN	8000	8010
TOTAL CFM - OUTLET	7075	8010
R/A CFM	5075	5920
O/A CFM	2000	2190
FAN RPM	1076	1111
ESP	1.40	1.58
INLET SP	0.16	
DISCHARGE SP	1.42	
FILTER ΔP	DNA	
SCP	1.25	

FAN SHEAVE	28K95H
FAN SHAFT	H 1-3/16"
SHAFT C / C	10-53/8"
BELT SIZE / NUMBER	BX38/2
MOTOR SHEAVE	1VP65
MOTOR SHAFT	1-3/8"
SHEAVE ADJ.	MID
FIXED SHEAVE	☐ -

MOTOR DATA

MOTOR MFG.	CENTURY
MOTOR HP	7-1/2
SERVICE FACTOR	1.15
PHASE / Hz	3/60
HEATER SIZE / RATING	-
MOTOR FRAME#	S213T

	SPECIFIED	ACTUAL
VOLTAGE	208	207/207/206
AMPERAGE	19.4	14.9/15.0/15.1
MOTOR BHP	5.73	5.8
MOTOR RPM	1745	1771
SPEED VFD	60 HZ	60 HZ

STATIC FAN PROFILE

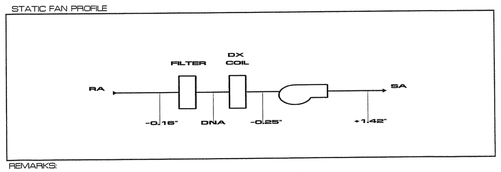

REMARKS:

7/99

RSAnalysis, Inc.

AABC

DATE 12/13/06
PAGE 2
UNIT HU-1

AIR MOVING EQUIPMENT DATA

AREA SERVED 1ST & 2ND FLOOR OFFICE

FAN	HU-1
EQUIP. LOCATION	ROOF
TYPE / SIZE	GAS FURNACE

EQUIPMENT MFG.	REZNOR
MODEL	RDH200
SERIAL NUMBER	BFJ91Y2N20557X

FAN DATA

	SPECIFIED	ACTUAL
TOTAL CFM- FAN	3000	3290
TOTAL CFM - OUTLET	3220	3290
R/A CFM	100%	100%
O/A CFM	-	-
FAN RPM	1106	927
TSP	1.25	0.85
INLET SP	0.25	
DISCHARGE SP	0.40	
FILTER ΔP	0.17	
SCP	1.0	

FAN SHEAVE	5-1/8" O.D.
FAN SHAFT	1"
SHAFT C / C	17-5/8"
BELT SIZE / NUMBER	A48/1
MOTOR SHEAVE	3-3/4" O.D.
MOTOR SHAFT	7/8"
SHEAVE ADJ.	MID
FIXED SHEAVE	☐ -

MOTOR DATA

MOTOR MFG.	CENTURY
MOTOR HP	2
SERVICE FACTOR	1.15
PHASE / Hz	3/60
HEATER SIZE / RATING	-
MOTOR FRAME#	PA56HC

	SPECIFIED	ACTUAL
VOLTAGE	208	157/158/158
AMPERAGE	6.8	4.3/4.4/4.4
MOTOR BHP	1.61	1.43
MOTOR RPM	1725	1470
SPEED VFD	60 HZ	50 HZ

TEMPERATURE DATA

COOLING	EAT	-	LAT	-
HEATING	EAT	69.5	LAT	104.5

STATIC FAN PROFILE

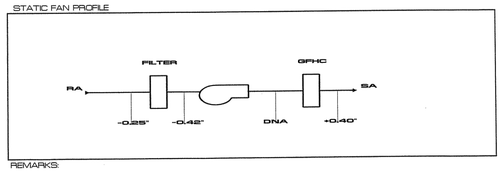

REMARKS:

7/99

A Tradition of Stewardship
A Commitment to Service

MK2 ENGINEERS

Green Valley Executive Center
5030 Business Center Drive,
Suite 150
Fairfield, CA 94534
(707) 759-5260
www.mk2eng.com

REGISTERED PROFESSIONAL ENGINEER
M. MIKE KIANI
M020804
12-31-20
MECHANICAL
STATE OF CALIFORNIA

THE DRAWINGS, PLANS, SPECIFICATIONS, ELECTRONIC DATABASE AND OTHER INSTRUMENTS OF PROFESSIONAL SERVICE PREPARED BY OR ON BEHALF OF CONSULTANT SHALL BECOME THE PROPERTY OF THE OWNER UPON PAYMENT FOR SUCH WORK. THESE DRAWINGS HAVE BEEN PREPARED SPECIFICALLY FOR THIS PROJECT AND SHALL NOT BE USED FOR ANY OTHER PROJECT, BY ANY OTHER ENTITY OR IN ANY OTHER LOCATION.

811 Know what's below. Call before you dig.

CALL 811 TWO FULL BUSINESS DAYS, MAXIMUM 14 CALENDAR DAYS, BEFORE DIGGING.

No.:	Revision:	Date:
	650 IMPERIAL WAY BID SET	2020-09-24

NAPA COUNTY PUBLIC WORKS

PROJECT:
650 IMPERIAL WAY - HVAC SYSTEM UPGRADE
PROJECT PW 18-03

650 IMPERIAL WAY
NAPA, CA 94559

SHEET CONTENTS:
2007 AS-BUILT TEST AND BALANCE REPORT REFERENCE ONLY MECHANICAL

BID SET

PROJECT DATE:	2020/02/05
SCALE:	AS NOTED
SHEET ISSUED DATE:	2020/09/24
APPROVED BY:	MK
DESIGN BY:	MK/SC
DRAWN BY:	DC/JH/AJ
CHECKED BY:	MK/SC
PROJECT NO.:	PW 18-03 / 20003.00

SHEET NO.:
M3.03

650 IMPERIAL WAY HVAC SYSTEM UPGRADE PW 18-03 BID SET – 2020/09/24

P:\2020\20003 – 650 IMPERIAL WAY – HVAC\DRAW\MK2-FILES\20003 – M3-03.DWG – PLOTTED BY DAVID COLEMAN

RSAnalysis, Inc.

AABC

DATE 12/15/06
PAGE 3
UNIT AC-1 / HV-1

VAV SUMMARY SHEET

CONSTANT | VARIABLE X | SINGLE X | DUAL X

TERMINAL UNIT	CD / HD SIZE	CD / HD FLOW COEF.	COOLING DESIGN CFM MIN	COOLING DESIGN CFM MAX	COOLING ACTUAL CFM MIN	COOLING ACTUAL CFM MAX	HEATING DESIGN CFM	HEATING ACTUAL CFM
VAV-1-1	8"/6"	0.6/0.6	112[1]	600	120	600	345[1]	350
VAV-1-2	6"/6"	0.7/0.7	110	375	110	385	100	200
VAV-1-3	8"/6"	0.6/0.6	210	700	210	690	350	345
VAV-1-4	8"/6"	0.6/0.6	180	600	180	635	300	310
VAV-2-1	6"/6"	0.6/0.6	50[1]	250	55	285	175[1]	185
VAV-2-2	8"/6"	0.68/0.68	110[1]	550	115	560	350[1]	365
VAV-2-3	6"	0.64	90	300	100	305	NA	NA
VAV-2-4	8"/6"	0.67/0.55	80[1]	425	80	420	235[1]	240
VAV-2-5	8"/6"	0.85/0.68	100[1]	500	110	520	340[1]	350
VAV-2-6	8"	0.64	120	400	125	400	NA	NA
VAV-2-7	8"/6"	0.7/0.72	90[1]	450	95	450	280[1]	280
VAV-2-8	6"/6"	0.6/0.54	90	300	95	300	150	155
VAV-2-9	6"	0.64	105	350	110	350	NA	NA
VAV-2-10	6"	0.62	90	300	100	300	NA	NA
VAV-2-11	8"/6"	0.7/0.6	180	600	180	625	300	320
VAV-2-12	6"/6"	0.59/0.6	75[1]	375	80	385	215	210

REMARKS:
(1) COOLING MINIMUM REDUCED TO 15% IN LIEU OF 30% AND HEATING INCREASED 15% FROM ORIGINAL DESIGN.

RSAnalysis, Inc.

AABC

DATE 12/15/06
PAGE 4
UNIT AC-1 / HV-1

DIFFUSER AND GRILLE TEST SHEET

FLOOR	OUTLET NO.	CODE	SIZE	EFFECTIVE AREA	DESIGN FPM	DESIGN CFM	INITIAL CFM	FINAL FPM	FINAL CFM
2ND	1	CD	0624			200	220		205
2ND	2	CD	0624			100	105		100
TOTAL VAV-2-3						300	325		305
2ND	3	CD	1024			275	330		275
2ND	4	CD	1024			275	325		285
TOTAL VAV-2-2						550	655		560
2ND	5	CD	0624			125	130		135
2ND	6	CD	0624			125	135		130
TOTAL VAV-2-1						250	265		265
2ND	7	CD	0624			225	210		225
2ND	8	CD	0624			225	145		225
TOTAL VAV-2-7						450	355		450
2ND	9	CD	0624			50	55		50
2ND	10	CD	0624			50	75		50
2ND	11	CD	0624			100	50		95
2ND	12	CD	0624			100	90		105
TOTAL VAV-2-8						300	310		300
2ND	13	CD	0624			125	115		125
2ND	14	CD	0624			125	105		135
2ND	14A	CD	0624			125	65		135
TOTAL VAV-2-12						375	285		395
2ND	15	CD	0624			175	30		180
2ND	16	CD	1024			250	215		240
TOTAL VAV-2-4						425	245		420

REMARKS:

RSAnalysis, Inc.

AABC

DATE 12/15/06
PAGE 5
UNIT AC-1 / HV-1

DIFFUSER AND GRILLE TEST SHEET

FLOOR	OUTLET NO.	CODE	SIZE	EFFECTIVE AREA	DESIGN FPM	DESIGN CFM	INITIAL CFM	FINAL FPM	FINAL CFM
2ND	17	CD	1024			250	180		270
2ND	18	CD	1024			250	200		250
TOTAL VAV-2-5						500	380		520
2ND	19	CD	1024			200	170		255
2ND	20	CD	0624			200	90		145
TOTAL VAV-2-6						400	260		400
2ND	21	CD	0624			200	270		210
2ND	21A	CD	0624			200	320		205
2ND	22	CD	0624			200	115		210
TOTAL VAV-1-3						600	705		625
2ND	23	CD	0624			150	210		150
2ND	24	CD	0624			150	210		150
TOTAL VAV-2-10						300	420		300
2ND	25	CD	24X24			DNL	205		205
2ND	26	CD	24X24			DNL	200		200
2ND	27	CD	24X24			DNL	200		200
2ND	28	CD	24X24			DNL	215		215
TOTAL VAV-1A						DNL	820[1]		820[1]
2ND	29	CD				150	200		150
2ND	30	CD				200	175		200
TOTAL VAV-2-9						350	375		350

REMARKS:
(1) EXISTING VAV BOX UNABLE TO LOCATE THERMOSTAT IN EXISTING CORRIDOR.

RSAnalysis, Inc.

AABC

DATE 12/15/06
PAGE 6
UNIT AC-1 / HV-1

DIFFUSER AND GRILLE TEST SHEET

FLOOR	OUTLET NO.	CODE	SIZE	EFFECTIVE AREA	DESIGN FPM	DESIGN CFM	INITIAL CFM	FINAL FPM	FINAL CFM
1ST	31	CD	0624			125	200		125
1ST	32	CD	0624			125	50		130
1ST	33	CD	0624			125	190		130
TOTAL VAV-1-2						375	440		385
1ST	34	CD				100	105		105
1ST	35	CD				500	530		530
TOTAL VAV-1-4						600	635		635
1ST	36	CD	0624			125	85		115
1ST	37	CD	0624			200	265		210
1ST	38	CD	0624			125	120		130
1ST	39	CD	0624			100	10		100
1ST	40	CD	0624			125	130		135
TOTAL VAV-1-3						675	610		690
1ST	41	CD	0624			200	260		205
1ST	42	CD	0624			100	160		110
1ST	43	CD	0624			100	335		110
1ST	44	CD	0624			200	325		210
TOTAL VAV-1-1						600	1080		635

REMARKS:

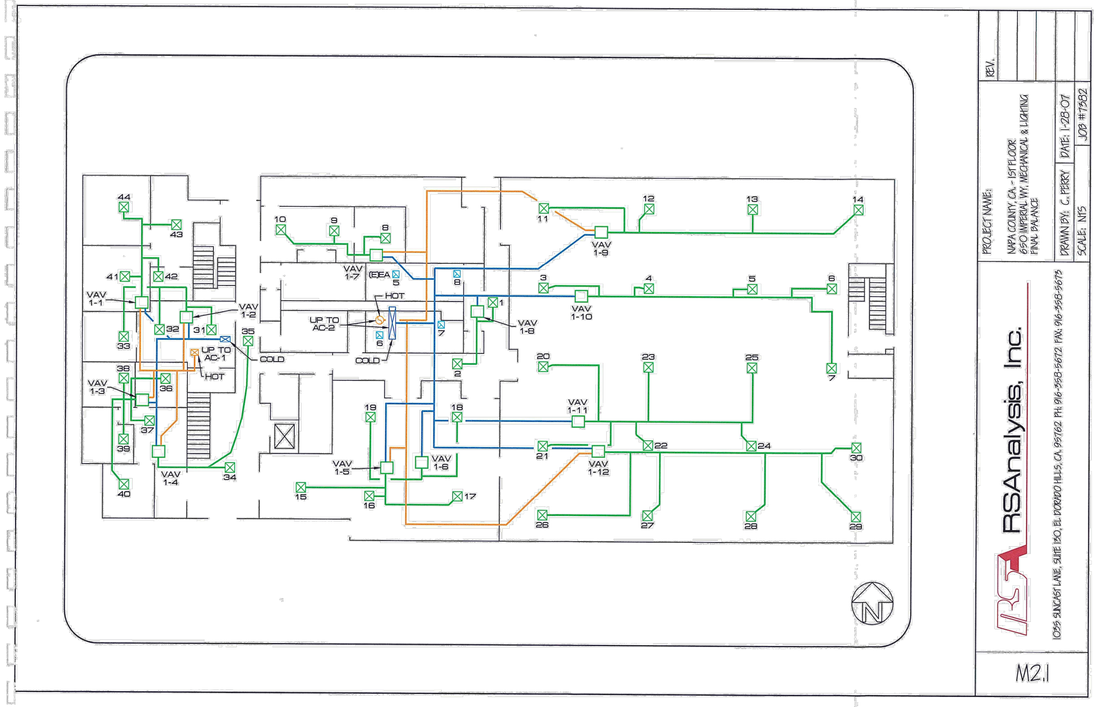

REV.
PROJECT NAME: NAPA COUNTY, CA - 1ST FLOOR 650 IMPERIAL WY. MECHANICAL & LIGHTING FINAL BALANCE
DATE: 1-23-07
DRAWN BY: C. PERRY
JOB #17952
SCALE: NTS
RSAnalysis, Inc.
10295 SUNCREST LANE, SUITE 150, EL DORADO HILLS, CA. 95762 PH. 916-933-6672 FAX. 916-933-9675
M2.1

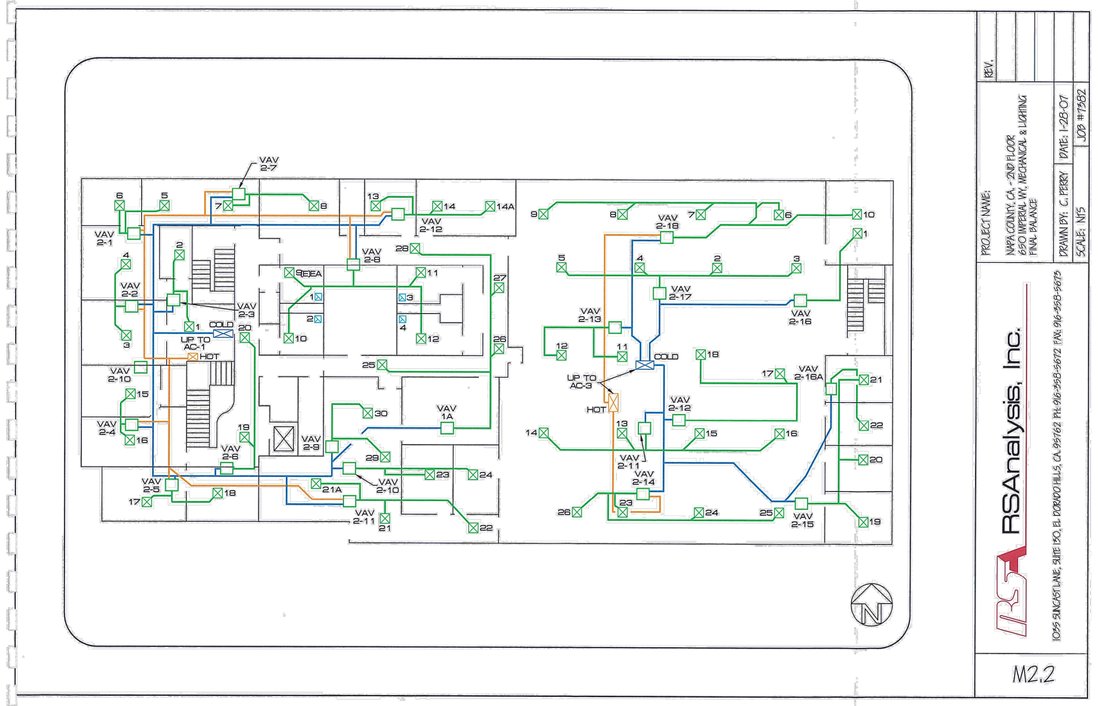

REV.
PROJECT NAME: NAPA COUNTY, CA - 2ND FLOOR 650 IMPERIAL WY. MECHANICAL & LIGHTING FINAL BALANCE
DATE: 1-23-07
DRAWN BY: C. PERRY
JOB #17952
SCALE: NTS
RSAnalysis, Inc.
10295 SUNCREST LANE, SUITE 150, EL DORADO HILLS, CA. 95762 PH. 916-933-6672 FAX. 916-933-9675
M2.2

NAPA COUNTY CALIFORNIA

A Tradition of Stewardship
A Commitment to Service

MK2 ENGINEERS

Green Valley Executive Center
5030 Business Center Drive,
Suite 150
Fairfield, CA 94534
(707) 759-5260
www.mk2eng.com

REGISTERED PROFESSIONAL ENGINEER
M. MIKE KIANI
M020804
12-31-20
MECHANICAL
STATE OF CALIFORNIA

THE DRAWINGS, PLANS, SPECIFICATIONS, ELECTRONIC DATABASE AND OTHER INSTRUMENTS OF PROFESSIONAL SERVICE PREPARED BY OR ON BEHALF OF CONSULTANT SHALL BECOME THE PROPERTY OF THE OWNER UPON PAYMENT FOR SUCH WORK. THESE DRAWINGS HAVE BEEN PREPARED SPECIFICALLY FOR THIS PROJECT AND SHALL NOT BE USED FOR ANY OTHER PROJECT, BY ANY OTHER ENTITY OR IN ANY OTHER LOCATION.

811 Know what's below. Call before you dig.

CALL 811 TWO FULL BUSINESS DAYS, MAXIMUM 14 CALENDAR DAYS, BEFORE DIGGING.

No.:	Revision:	Date:
	650 IMPERIAL WAY BID SET	2020-09-24

NAPA COUNTY
PUBLIC WORKS

PROJECT:
650 IMPERIAL WAY - HVAC SYSTEM UPGRADE
PROJECT PW 18-03

650 IMPERIAL WAY
NAPA, CA 94559

SHEET CONTENTS:
2007 AS-BUILT TEST AND BALANCE REPORT REFERENCE ONLY MECHANICAL

BID SET

PROJECT DATE:	2020/02/05
SCALE:	AS NOTED
SHEET ISSUED DATE:	2020/09/24
APPROVED BY:	MK
DESIGN BY:	MK/SC
DRAWN BY:	DC/JH/AJ
CHECKED BY:	MK/SC
PROJECT NO.:	PW 18-03 / 20003.00

SHEET NO.:
M3.04

650 IMPERIAL WAY HVAC SYSTEM UPGRADE PW 18-03 BID SET - 2020/09/24

P:\2020\20003 - 650 IMPERIAL WAY - HVAC\DRAW\MK2-FILES\20003 - M3-04.DWG - PLOTTED BY DAVID COLEMAN

NOTES:

1) ENERGY MANAGEMENT SYSTEM TO BE SIEMENS APOGEE CONTROLS SYSTEM TO MATCH THE BUILDINGS EXISTING SYSTEM. CONTACT ANDREW JENSEN FOR DETAIL (916) 769-3207.
2) REPLACE EXISTING SIEMENS CONTROLLER ON AC-1 & 2 WITH NEW PXC CONTROLLER.
3) REPLACE EXISTING SIEMENS CONTROLLER ON HU-1, 2 & 3 WITH NEW PXC CONTROLLER.
4) PROVIDE BACNET MS/TP INTEGRATION TO NEW AC-3 AND NEW HU-1,2,3 (IF ALTERNATE#1 TAKEN). COORDINATE WITH EQUIPMENT MANUFACTURER TO CONFIRM SCOPE AS DETAILED BELOW.
5) SIEMENS TO SUPPORT TEST AND BALANCE CONTRACTOR IN COMPLETION OF TAB REQUIREMENTS.
6) UPDATE GRAPHICS AND DATABASE AT EXISTING SIEMENS APOGEE INSIGHT DATABASE SERVER.

MATERIAL LEGEND

ALL PART NUMBERS ARE SIEMENS UNLESS OTHERWISE NOTED

SYMBOL	DESCRIPTION
PXC	SIEMENS PXC CONTROL PANEL
VS	VELOCITY/AIRFLOW SENSOR
RTS	ROOM SENSOR WITH SETPOINT ADJUSTMENT AND OVERRIDE BUTTON
DTS	DUCT TEMPERATURE SENSOR
TCC	TEMPERATURE CONTROL CONTRACTOR
TEC	TERMINAL EQUIPMENT CONTROLLER
MAS	MIXED AIR SENSOR
VA	2-WAY VALVE (SIZE VALVE PER CV)
OTS	GLOBAL OUTSIDE AIR TEMPERATURE SENSOR
DMP	DAMPER
CS	VERIS CURRENT SENSOR
AFMS	AIRFLOW MEASURING STATION
RIB	FUNCTIONAL DEVICES RELAY IN A BOX
PWR	REQUIRED POWER BY DIVISION 16
PWR/FA	120V POWER AND FIRE ALARM INTERLOCK WIRING BY DIVISION 16
WTS	WATER TEMPERATURE SENSOR
VFD	VARIABLE FREQUENCY DRIVE
MD	MANUAL DAMPER BY MECHANICAL CONTRACTOR
TX	TRANSFORMER XX VOLTS TO 24 VOLTS AS REQUIRED
SD	DUCT SMOKE DETECTOR
LAN	LOCAL AREA NETWORK FOR COMMUNICATIONS
DPT	DIFFERENTIAL PRESSURE TRANSMITTER
WFM	WATER FLOW METER

EA	EXHAUST AIR	AI	ANALOG INPUT
SA	SUPPLY AIR	DI	DIGITAL INPUT
RA	RETURN AIR	AO	ANALOG OUTPUT
OSA	OUTSIDE AIR	DO	DIGITAL OUTPUT

WIRING BY TEMPERATURE CONTROL CONTRACTOR (TCC)

WIRING BY DIVISION 16 ELECTRICAL CONTRACTOR (EC)

THESE CONTROL DIAGRAMS ARE DIAGRAMMATIC AND DO NOT DEPICT ALL CONTROL WIRES, RELAYS OR COMPONENTS OF A COMPLETE SYSTEM. IT IS THE RESPONSIBILITY OF THE TEMPERATURE CONTROLS CONTRACTOR TO PROVIDE A COMPLETE AND FUNCTIONAL CONTROL SYSTEM AT NO ADDITIONAL COST TO THE OWNER.

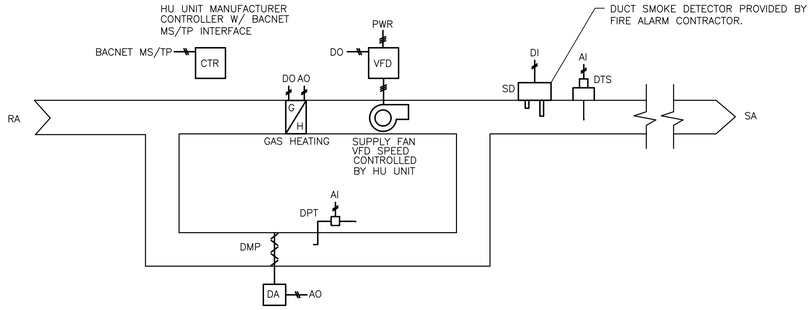

3 HEATING UNIT CONTROL DIAGRAM (TYP IF ALT #1 TAKEN)

SCALE: NONE

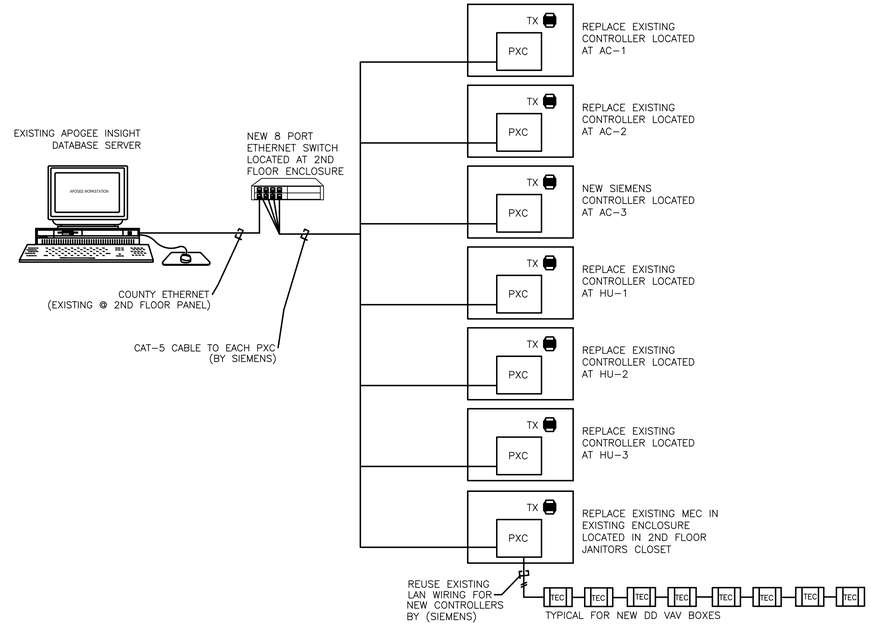

1 SYSTEM LAYOUT

SCALE: NONE

CONTROLS SYSTEM IS BASED ON SIEMENS TO MATCH EXISTING BUILDING CONTROLS SYSTEM. CONTRACTOR SHALL FOLLOW THIS DRAWING TO OBTAIN BIDS AND TO PROVIDE CONTROL SYSTEM. CONTROLS SYSTEM FROM SIEMENS. CONTACT ANDREW JENSEN, (916)769-3207.

DEFERRED APPROVAL.CONTRACTOR TO PROVIDE SUBMITTAL FOR THE SMOKE DETECTOR TO BE APPROVED BY THE COUNTY FIRE DEPARTMENT.

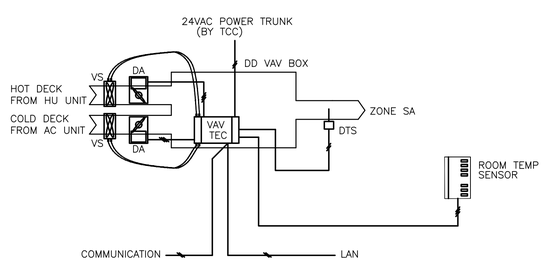

NOTES:
1. SEE SCHEDULES AND PLANS FOR QUANITIES AND LOCATIONS
2. MOUNT PLENUM RATED VAV-SIEMENS CONTROLLER ONTO VAV BOX
3. NEW DD CONTROLLER TO REPLACE EXISTING COOLING ONLY VAV CONTROLLER.

4 NEW DUAL DUCT VAV BOX CONTROL DIAGRAM

SCALE: SEE SCHEDULE

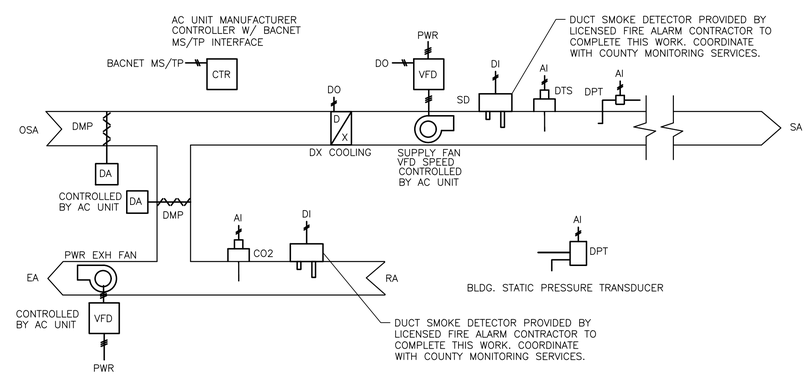

2 AIR CONDITIONING UNIT AC-3 (NEW)

SCALE: NONE

A Tradition of Stewardship
A Commitment to Service

THE DRAWINGS, PLANS, SPECIFICATIONS, ELECTRONIC DATABASE AND OTHER INSTRUMENTS OF PROFESSIONAL SERVICE PREPARED BY OR ON BEHALF OF CONSULTANT SHALL BECOME THE PROPERTY OF THE OWNER UPON PAYMENT FOR SUCH WORK. THESE DRAWINGS HAVE BEEN PREPARED SPECIFICALLY FOR THIS PROJECT AND SHALL NOT BE USED FOR ANY OTHER PROJECT, BY ANY OTHER ENTITY OR IN ANY OTHER LOCATION.

811 Know what's below. Call before you dig.

CALL 811 TWO FULL BUSINESS DAYS, MAXIMUM 14 CALENDAR DAYS, BEFORE DIGGING.

No.:	Revision:	Date:
	650 IMPERIAL WAY BID SET	2020-09-24

NAPA COUNTY PUBLIC WORKS

PROJECT:
650 IMPERIAL WAY - HVAC SYSTEM UPGRADE
PROJECT PW 18-03

650 IMPERIAL WAY
NAPA, CA 94559

SHEET CONTENTS:
DIAGRAMS

MECHANICAL
BID SET

PROJECT DATE:	2020/02/05
SCALE:	AS NOTED
SHEET ISSUED DATE:	2020/09/24
APPROVED BY:	
DESIGN BY:	
DRAWN BY:	
CHECKED BY:	
PROJECT NO.:	PW 18-03 / 20003.00

SHEET NO.:
M6.01

650 IMPERIAL WAY HVAC SYSTEM UPGRADE PW 18-03 BID SET - 2020/09/24

P:\2020\20003 - 650 IMPERIAL WAY - HVAC\DRAW\MK2-FILES\20003 - M6-01.DWG - PLOTTED BY DAVID COLEMAN

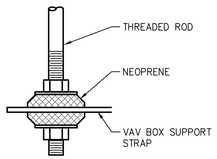

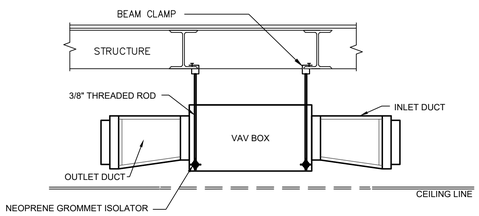

VAV BOX SUPPORT DETAIL 9 / M7.01
NOT TO SCALE

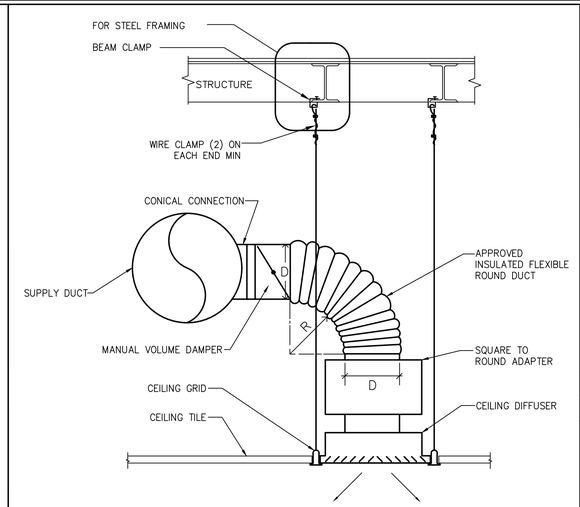

NOTES:

1. WHERE HEADROOM PERMITTED (R=D) CONNECTION TO DIFFUSER SHALL BE MADE AS SHOWN.
2. FLEXIBLE DUCTS 5'-0" MAXIMUM IN LENGTH.

DIFFUSER CONNECTION DETAIL 6 / M7.01
NOT TO SCALE

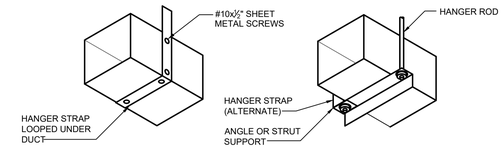

FIGURE A FIGURE B

RECTANGULAR DUCT SUPPORT 1 / M7.01
NOT TO SCALE

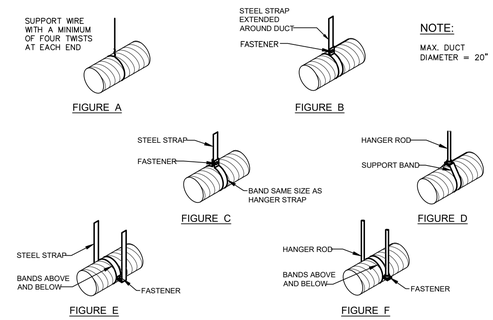

NOTE:

MAX. DUCT DIAMETER = 20"

FIGURE A FIGURE B FIGURE C FIGURE D FIGURE E FIGURE F

ROUND DUCT SUPPORT 2 / M7.01
NOT TO SCALE

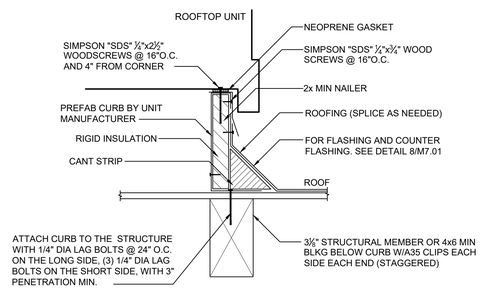

ROOF TOP UNIT MOUNTING DETAIL 7 / M7.01
NOT TO SCALE

NOTES:

1. MAX. DISTANCE BETWEEN SUPPORTS = 48".
2. MAX. DUCT SAG BETWEEN SUPPORTS = ½"

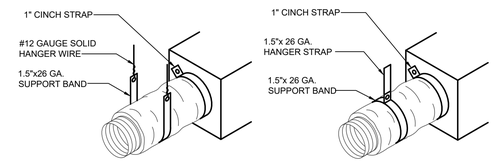

FIGURE A
DUCT 10" MAX.

FIGURE B
DUCT 24" MAX.

FLEXIBLE DUCT CONNECTION DETAIL 3 / M7.01
NOT TO SCALE

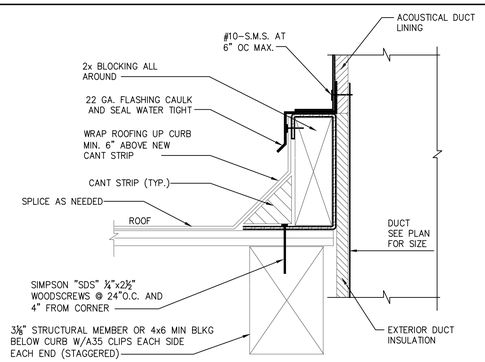

DUCT THRU ROOF PENETRATION 8 / M7.01
NOT TO SCALE

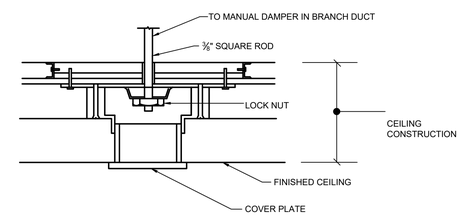

NOTE:

USE THIS DAMPER CONTROLLER WHERE CEILING IS NOT ACCESSIBLE.

MANUAL VOLUME DAMPER DETAIL 4 / M7.01
NOT TO SCALE

-12 / M7.01 NOT TO SCALE
-13 / M7.01 NOT TO SCALE
-14 / M7.01 NOT TO SCALE
-15 / M7.01 NOT TO SCALE
-10 / M7.01 NOT TO SCALE
-11 / M7.01 NOT TO SCALE

NAPA COUNTY CALIFORNIA
A Tradition of Stewardship
A Commitment to Service

MK2 ENGINEERS

Green Valley Executive Center
5030 Business Center Drive,
Suite 150
Fairfield, CA 94534
(707) 759-5260
www.mk2eng.com

REGISTERED PROFESSIONAL ENGINEER
M. MIKE KANI
M020804
12-31-20
MECHANICAL
STATE OF CALIFORNIA

THE DRAWINGS, PLANS, SPECIFICATIONS, ELECTRONIC DATABASE AND OTHER INSTRUMENTS OF PROFESSIONAL SERVICE PREPARED BY OR ON BEHALF OF CONSULTANT SHALL BECOME THE PROPERTY OF THE OWNER UPON PAYMENT FOR SUCH WORK. THESE DRAWINGS HAVE BEEN PREPARED SPECIFICALLY FOR THIS PROJECT AND SHALL NOT BE USED FOR ANY OTHER PROJECT, BY ANY OTHER ENTITY OR IN ANY OTHER LOCATION.

811 Know what's below. Call before you dig.

CALL 811 TWO FULL BUSINESS DAYS, MAXIMUM 14 CALENDAR DAYS, BEFORE DIGGING.

No.:	Revision:	Date:
	650 IMPERIAL WAY BID SET	2020-09-24

NAPA COUNTY PUBLIC WORKS

PROJECT:
650 IMPERIAL WAY - HVAC SYSTEM UPGRADE
PROJECT PW 18-03

650 IMPERIAL WAY
NAPA, CA 94559

650 IMPERIAL WAY HVAC SYSTEM UPGRADE PW 18-03 BID SET - 2020/09/24

SHEET CONTENTS:
DETAILS

MECHANICAL
BID SET

PROJECT DATE:	2020/02/05
SCALE:	AS NOTED
SHEET ISSUED DATE:	2020/09/24
APPROVED BY:	MK
DESIGN BY:	MK/SC
DRAWN BY:	DC/JH/AJ
CHECKED BY:	MK/SC
PROJECT NO.:	PW 18-03 / 20003.00

SHEET NO.:
M7.01

P:\2020\20003 - 650 IMPERIAL WAY - HVAC\DRAW\MK2-FILES\20003 - M7-01.DWG - PLOTTED BY DAVID COLEMAN

STATE OF CALIFORNIA
Mechanical Systems
NRCC-MCH-E — CALIFORNIA ENERGY COMMISSION

CERTIFICATE OF COMPLIANCE			**NRCC-MCH-E**
Project Name:	650 IMPERIAL WAY BUILDING	**Report Page:**	**(Page 7 of 19)**
Project Address:	650 IMPERIAL WAY	**Date Prepared:**	9/22/2020

J. VENTILATION AND INDOOR AIR QUALITY

(E)VAV2.14	Office space	969			145.4	0	0	DCV	Provided per §120.1(d)4
								Occ Sensor	NA: Not required space type
(E)VAV2.15	Office space	492			73.8	0	0	DCV	Provided per §120.1(d)4
								Occ Sensor	NA: Not required space type
(E)VAV2.16	Office space	150			22.5	0	0	DCV	Provided per §120.1(d)4
								Occ Sensor	NA: Not required space type
(E)VAV2.16A	Office space	161			24.2	0	0	DCV	Provided per §120.1(d)4
								Occ Sensor	NA: Not required space type
(N)VAV2.17	Office space	1120			168	0	0	DCV	Provided per §120.1(d)4
								Occ Sensor	NA: Not required space type
(E)VAV2.18	Office space	902			135.3	0	0	DCV	Provided per §120.1(d)4
								Occ Sensor	NA: Not required space type
17	Total System Required Min OA CFM				1076	18	Ventilation for this System Complies?		Yes
04		05				06		07	
System Name	HU-1	System Design OA CFM Airflow[1]		1422	System Design Transfer Air CFM		0	Air Filtration per §120.1(c) and §141.0(b)2 [2] Provided per §120.1(c) (NR and Hotel/Motel))	
08	09	10	11	12	13	14	15	16	

Registration Number: | Registration Date/Time: | Registration Provider: Energysoft

CA Building Energy Efficiency Standards - 2019 Nonresidential Compliance | Report Version: 2019.1.003 Schema Version: rev 20190401 | Report Generated: 2020-09-22 17:12:24

STATE OF CALIFORNIA
Mechanical Systems
NRCC-MCH-E — CALIFORNIA ENERGY COMMISSION

CERTIFICATE OF COMPLIANCE			**NRCC-MCH-E**
Project Name:	650 IMPERIAL WAY BUILDING	**Report Page:**	**(Page 4 of 19)**
Project Address:	650 IMPERIAL WAY	**Date Prepared:**	9/22/2020

H. FAN SYSTEMS & AIR ECONOMIZERS

System Name:	HU-2	**Economizer:[1]**	NA: <=54 kBtu/h cooling	**Economizer Controls:**	Designed per §140.4(e) and (m)	**System Fan Type:**	Variable Air Volume
01	02	03	04	05	06	07	08
Fan Name or Item Tag	Fan Function	Qty	Maximum Design Supply Airflow (CFM)	HP Unit[2]	Design HP	Fan Power Pressure Drop Adjustment - Table 140.4-B: Device	Design Airflow through Device (CFM)
SF	Supply	1	5000	BHP	1.3		
Total System Design Supply Airflow (CFM):			5000	Total System Design (B)HP:	1.3	**Maximum System Fan Power (B)HP:**	6.5
System Name:	HU-3	**Economizer:[1]**	NA: <=54 kBtu/h cooling	**Economizer Controls:**	Designed per §140.4(e) and (m)	**System Fan Type:**	Variable Air Volume
01	02	03	04	05	06	07	08
Fan Name or Item Tag	Fan Function	Qty	Maximum Design Supply Airflow (CFM)	HP Unit[2]	Design HP	Fan Power Pressure Drop Adjustment - Table 140.4-B: Device	Design Airflow through Device (CFM)
SF	Supply	1	3000	BHP	1.61		
Total System Design Supply Airflow (CFM):			3000	Total System Design (B)HP:	1.61	**Maximum System Fan Power (B)HP:**	3.9

[1] FOOTNOTES: Computer room economizers must meet requirements of §140.9(a) and will be documented on the NRCC-PRC-E document.

[2] The unit used for HP must be consistent for all fans within a system.

Registration Number: | Registration Date/Time: | Regististration Provider: Energysoft

CA Building Energy Efficiency Standards - 2019 Nonresidential Compliance | Report Version: 2019.1.003 Schema Version: rev 20190401 | Report Generated: 2020-09-22 17:12:24

STATE OF CALIFORNIA
Mechanical Systems
NRCC-MCH-E — CALIFORNIA ENERGY COMMISSION

CERTIFICATE OF COMPLIANCE			**NRCC-MCH-E**
Project Name:	650 IMPERIAL WAY BUILDING	**Report Page:**	**(Page 1 of 19)**
Project Address:	650 IMPERIAL WAY	**Date Prepared:**	9/22/2020

This document is used to demonstrate compliance for mechanical systems that are within the scope of the permit application and are demonstrating compliance using the prescriptive path outlined in §140.4, or §141.0(b)2 for alterations.

Project Name:	650 IMPERIAL WAY BUILDING	**Report Page:**	**(Page 1 of 19)**
Project Address:	650 IMPERIAL WAY	**Date Prepared:**	9/22/2020

A. GENERAL INFORMATION

01	Project Location (city)	NAPA	04	Total Conditioned Floor Area	50625.8
02	Climate Zone	11	05	Total Unconditioned Floor Area	0
03	Occupancy Types Within Project:		06	# of Stories (Habitable Above Grade)	2
☒ Office (B)		☐ Retail (M)	☐ Non-refrigerated Warehouse (S)		
☐ Hotel/ Motel Guest Rooms (R-1)		☐ School (E)	☐ Healthcare Facility (I)		
☐ High-Rise Residential (R-2/R-3)		☐ Relocatable Class Bldg (E)	☒ Other (write in)		See Table J

B. PROJECT SCOPE

This table includes mechanical systems or components that are within the scope of the permit application and are demonstrating compliance using the prescriptive path outlined in §140.4, or §141.0(b)2 for alterations.

01	02	03
Air System(s)	Wet System Components	Dry System Components
☐ Heating Air System	☐ Water Economizer	☒ Air Economizer
☐ Cooling Air System	☐ Pumps	☐ Electric Resistance Heat
Mechanical Controls	☐ Smart Piping	☒ Fan Systems
☒ Mechanical Controls (existing to remain, altered or new)	☐ Cooling Towers	☐ Ductwork (existing to remain, altered or new)
	☐ Chillers	☒ Ventilation
	☐ Boilers	☒ Zonal Systems/ Terminal Boxes

Registration Number: | Registration Date/Time: | Registration Provider: Energysoft

CA Building Energy Efficiency Standards - 2019 Nonresidential Compliance | Report Version: 2019.1.003 Schema Version: rev 20190401 | Report Generated: 2020-09-22 17:12:24

STATE OF CALIFORNIA
Mechanical Systems
NRCC-MCH-E — CALIFORNIA ENERGY COMMISSION

CERTIFICATE OF COMPLIANCE			**NRCC-MCH-E**
Project Name:	650 IMPERIAL WAY BUILDING	**Report Page:**	**(Page 8 of 19)**
Project Address:	650 IMPERIAL WAY	**Date Prepared:**	9/22/2020

J. VENTILATION AND INDOOR AIR QUALITY

Space Name ot Item Tag	Mechanical Ventilation Required per §120.1(c)3 [3]: Occupancy Type[4]	Conditioned Floor Area (ft²)	# of Shower heads/ toilets	# of people[5]	Required Min OA CFM	Exh. Vent per §120.1(c)4: Required Min CFM	Provided per Design CFM	DCV or Sensor Controls per §120.1(d)3, §120.1(d)5, and §120.1(e)3 [6]	
(E)VAV1.1 H	Office space	746.2			111.9	0	0	DCV	Provided per §120.1(d)4
								Occ Sensor	NA: Not required space type
(E)VAV1.2 H	Office space	441			66.1	0	0	DCV	NA: Not required per §120.1(d)3
								Occ Sensor	NA: Not required space type
(E)VAV1.3 H	Office space	508			76.2	0	0	DCV	Provided per §120.1(d)4
								Occ Sensor	NA: Not required space type
(E)VAV1.4 H	Office space	259			38.8	0	0	DCV	Provided per §120.1(d)4
								Occ Sensor	NA: Not required space type
(E)VAV2.1 H	Office space	259			38.8	0	0	DCV	Provided per §120.1(d)4
								Occ Sensor	NA: Not required space type
(E)VAV2.2 H	Office space	581.5			87.2	0	0	DCV	Provided per §120.1(d)4
								Occ Sensor	NA: Not required space type

Registration Number: | Registration Date/Time: | Registration Provider: Energysoft

CA Building Energy Efficiency Standards - 2019 Nonresidential Compliance | Report Version: 2019.1.003 Schema Version: rev 20190401 | Report Generated: 2020-09-22 17:12:24

STATE OF CALIFORNIA
Mechanical Systems
NRCC-MCH-E — CALIFORNIA ENERGY COMMISSION

CERTIFICATE OF COMPLIANCE			**NRCC-MCH-E**
Project Name:	650 IMPERIAL WAY BUILDING	**Report Page:**	**(Page 5 of 19)**
Project Address:	650 IMPERIAL WAY	**Date Prepared:**	9/22/2020

I. SYSTEM CONTROLS

This table is used to demonstrate compliance with mandatory controls in §110.2 and §120.2 and prescriptive controls in §140.4(f) and (n) or requirements in §141.0(b)2E for altered space conditioning systems.

01	02	03	04	05	06	07	08	09
System Name	System Zoning	Conditioned Floor Area Being Served (ft²)	Thermostats §110.2(b) & (c)[1], §120.2(a)or §141.0(b)2E	Shut-Off Controls §120.2(e)	Isolation Zone Controls §120.2(g)	Demand Response §110.12 and §120.2(b)	Supply Air Temp. Reset §140.4(f)	Window Interlocks per §140.4(n)
AC-3	Multi-zone w/ DDC to zone	<= 25,000 ft²	NA: Eq. type per 110.2(c) exception[1]	Auto Timer Switch	4 Hour Timer	EMCS	Included	Provided
HU-1	Multi-zone w/ DDC to zone	<= 25,000 ft²	NA: Eq. type per 110.2(c) exception[1]	Auto Timer Switch	4 Hour Timer	EMCS	NA: Alteration	NA: Alteration Project
HU-2	Multi-zone w/ DDC to zone	<= 25,000 ft²	EMCS	NA: 7 day per §120.2(e)1	4 Hour Timer	EMCS	NA: Alteration	NA: Alteration Project
HU-3	Multi-zone w/ DDC to zone	<= 25,000 ft²	EMCS	NA: 7 day per §120.2(e)1	4 Hour Timer	EMCS	NA: Alteration	NA: Alteration Project

[1] FOOTNOTES: Gravity gas wall heaters, gravity floor heaters, gravity room heaters, non-central electric heaters, fireplaces or decorative gas appliances, wood stoves are not required to have setback thermostats.

*Notes: Controls with a * require a note in the space below explaining how compliance is achieved. EX: system 1: SA Temp Reset: Exempt because zones compliant with §140.4(d) ; EXCEPTION 1 to §140.4(f)

Registration Number: | Registration Date/Time: | Registration Provider: Energysoft

CA Building Energy Efficiency Standards - 2019 Nonresidential Compliance | Report Version: 2019.1.003 Schema Version: rev 20190401 | Report Generated: 2020-09-22 17:12:24

STATE OF CALIFORNIA
Mechanical Systems
NRCC-MCH-E — CALIFORNIA ENERGY COMMISSION

CERTIFICATE OF COMPLIANCE			**NRCC-MCH-E**
Project Name:	650 IMPERIAL WAY BUILDING	**Report Page:**	**(Page 2 of 19)**
Project Address:	650 IMPERIAL WAY	**Date Prepared:**	9/22/2020

C. COMPLIANCE RESULTS

Table C will indicate if the project data input into the compliance document is compliant with mechanical requirements. This table is not editable by the user. If this table says "DOES NOT COMPLY" or "COMPLIES with Exceptional Conditions" refer to Table D., or the table indicated as not compliant for guidance.

01		02		03		04		05		06		07		08		09
System Summary §110.1, §110.2, §140.4	AND	Pumps §140.4(k)	AND	Fans/ Economizers §140.4(c), §140.4(e)	AND	System Controls §110.2, §120.2, §140.4(f)	AND	Ventilation §120.1	AND	Terminal Box Controls §140.4(d)	AND	Distribution §120.3, §140.4(l)	AND	Cooling Towers §110.2(e)2		Compliance Results
(See Table F)		(See Table G)		(See Table H)		(See Table I)		(See Table J)		(See Table K)		(See Table L)		(See Table M)		
	AND		AND	Yes	AND	Yes	AND	Yes	AND	Yes	AND		AND			COMPLIES
Mandatory Measures Compliance (See Table Q for Details)												COMPLIES				

D. EXCEPTIONAL CONDITIONS

This table is auto-filled with uneditable comments because of selections made or data entered in tables throughout the form.

E. ADDITIONAL REMARKS

This table includes remarks made by the permit applicant to the Authority Having Jurisdiction.

F. HVAC SYSTEM SUMMARY (DRY & WET SYSTEMS)

This section does not apply to this project.

G. PUMPS

This section does not apply to this project.

Registration Number: | Registration Date/Time: | Registration Provider: Energysoft

CA Building Energy Efficiency Standards - 2019 Nonresidential Compliance | Report Version: 2019.1.003 Schema Version: rev 20190401 | Report Generated: 2020-09-22 17:12:24

STATE OF CALIFORNIA
Mechanical Systems
NRCC-MCH-E — CALIFORNIA ENERGY COMMISSION

CERTIFICATE OF COMPLIANCE			**NRCC-MCH-E**
Project Name:	650 IMPERIAL WAY BUILDING	**Report Page:**	**(Page 9 of 19)**
Project Address:	650 IMPERIAL WAY	**Date Prepared:**	9/22/2020

J. VENTILATION AND INDOOR AIR QUALITY

(E)VAV2.3 H	Office space	307			46	0	0	DCV	Provided per §120.1(d)4
								Occ Sensor	NA: Not required space type
(E)VAV2.4 H	Office space	453.4			68	0	0	DCV	Provided per §120.1(d)4
								Occ Sensor	NA: Not required space type
(E)VAV2.5 H	Office space	492			73.8	0	0	DCV	Provided per §120.1(d)4
								Occ Sensor	NA: Not required space type
(E)VAV2.6 H	Office space	682			102.3	0	0	DCV	Provided per §120.1(d)4
								Occ Sensor	NA: Not required space type
(E)VAV2.7 H	Office space	491			73.6	0	0	DCV	Provided per §120.1(d)4
								Occ Sensor	NA: Not required space type
(E)VAV2.8 H	Office space	851			127.6	0	0	DCV	Provided per §120.1(d)4
								Occ Sensor	NA: Not required space type
(E)VAV2.9 H	Office space	382			57.3	0	0	DCV	Provided per §120.1(d)4
								Occ Sensor	NA: Not required space type

Registration Number: | Registration Date/Time: | Registration Provider: Energysoft

CA Building Energy Efficiency Standards - 2019 Nonresidential Compliance | Report Version: 2019.1.003 Schema Version: rev 20190401 | Report Generated: 2020-09-22 17:12:24

STATE OF CALIFORNIA
Mechanical Systems
NRCC-MCH-E — CALIFORNIA ENERGY COMMISSION

CERTIFICATE OF COMPLIANCE			**NRCC-MCH-E**
Project Name:	650 IMPERIAL WAY BUILDING	**Report Page:**	**(Page 6 of 19)**
Project Address:	650 IMPERIAL WAY	**Date Prepared:**	9/22/2020

J. VENTILATION AND INDOOR AIR QUALITY

This table is used to demonstrate compliance with mandatory ventilation requirements in §120.1 and §120.2(e)3B for all nonresidential, high-rise residential and hotel/motel occupancies. For alterations, only ventilation systems being altered within the scope of the permit application need to be documented in this table. In lieu of this table, the required outdoor ventilation rates and airflows may be shown on the plans or the calculations can be presented in a spreadsheet.

01	☐	Check box if the project is showing ventilation calculations on the plans, or attaching the calculations instead of completing this table.
02	☒	Check this box if the project included Nonresidential or Hotel/Motel spaces
	☐	Check this box if the project included new or altered high-rise residential dwelling units.
03	☐	Check the box if the project is using natural ventilation in any nonresidential or hotel/motel spaces to meet required ventilation rates per §120.1(c)2.

Nonresidential and Hotel/ Motel Ventilation Systems

04		05			06			07	
System Name	AC-3	System Design OA CFM Airflow[1]		1076	System Design Transfer Air CFM		0	Air Filtration per §120.1(c) and §141.0(b)2 [2] Provided per §120.1(c) (NR and Hotel/Motel))	
08	09	10	11	12	13	14	15	16	
Space Name ot Item Tag	Mechanical Ventilation Required per §120.1(c)3 [3]: Occupancy Type[4]	Conditioned Floor Area (ft²)	# of Shower heads/ toilets	# of people[5]	Required Min OA CFM	Exh. Vent per §120.1(c)4: Required Min CFM	Provided per Design CFM	DCV or Sensor Controls per §120.1(d)3, §120.1(d)5, and §120.1(e)3 [6]	
(N)VAV2.11	Office space	1102			165.3	0	0	DCV	NA: Not required per §120.1(d)3
								Occ Sensor	NA: Not required space type
(N)VAV2.12	Office space	1196			179.4	0	0	DCV	Provided per §120.1(d)4
								Occ Sensor	NA: Not required space type
(N)VAV2.13	Office space	1082			162.3	0	0	DCV	Provided per §120.1(d)4
								Occ Sensor	NA: Not required space type

Registration Number: | Registration Date/Time: | Registration Provider: Energysoft

CA Building Energy Efficiency Standards - 2019 Nonresidential Compliance | Report Version: 2019.1.003 Schema Version: rev 20190401 | Report Generated: 2020-09-22 17:12:24

STATE OF CALIFORNIA
Mechanical Systems
NRCC-MCH-E — CALIFORNIA ENERGY COMMISSION

CERTIFICATE OF COMPLIANCE			**NRCC-MCH-E**
Project Name:	650 IMPERIAL WAY BUILDING	**Report Page:**	**(Page 3 of 19)**
Project Address:	650 IMPERIAL WAY	**Date Prepared:**	9/22/2020

H. FAN SYSTEMS & AIR ECONOMIZERS

This table is used to demonstrate compliance with prescriptive requirements found in §140.4(c), §140.4(e) and §140.4(m) for fan systems. Fan systems serving only process loads are exempt from these requirements and do not need to be included in Table H.

System Name:	AC-3	**Economizer:[1]**	Differential Temperature	**Economizer Controls:**	Designed per §140.4(e) and (m)	**System Fan Type:**	Variable Air Volume
01	02	03	04	05	06	07	08
Fan Name or Item Tag	Fan Function	Qty	Maximum Design Supply Airflow (CFM)	HP Unit[2]	Design HP	Fan Power Pressure Drop Adjustment - Table 140.4-B: Device	Design Airflow through Device (CFM)
SF	Supply	1	15000	BHP	15		
RF	Return	1	0	BHP	5		
Total System Design Supply Airflow (CFM):			15000	Total System Design (B)HP:	20	**Maximum System Fan Power (B)HP:**	19.5
System Name:	HU-1	**Economizer:[1]**	NA: <=54 kBtu/h cooling	**Economizer Controls:**	Designed per §140.4(e) and (m)	**System Fan Type:**	Variable Air Volume
01	02	03	04	05	06	07	08
Fan Name or Item Tag	Fan Function	Qty	Maximum Design Supply Airflow (CFM)	HP Unit[2]	Design HP	Fan Power Pressure Drop Adjustment - Table 140.4-B: Device	Design Airflow through Device (CFM)
SF	Supply	1	3000	BHP	1.61		
Total System Design Supply Airflow (CFM):			3000	Total System Design (B)HP:	1.61	**Maximum System Fan Power (B)HP:**	3.9

Registration Number: | Registration Date/Time: | Registration Provider: Energysoft

CA Building Energy Efficiency Standards - 2019 Nonresidential Compliance | Report Version: 2019.1.003 Schema Version: rev 20190401 | Report Generated: 2020-09-22 17:12:24

NAPA COUNTY CALIFORNIA
A Tradition of Stewardship
A Commitment to Service

MK2 ENGINEERS
Green Valley Executive Center
5030 Business Center Drive,
Suite 150
Fairfield, CA 94534
(707) 759-5260
www.mk2eng.com

REGISTERED PROFESSIONAL ENGINEER — M. MIKE KIANI — 20030804 — 12-31-20 — MECHANICAL — STATE OF CALIFORNIA

THE DRAWINGS, PLANS, SPECIFICATIONS, ELECTRONIC DATABASE AND OTHER INSTRUMENTS OF PROFESSIONAL SERVICE PREPARED BY OR ON BEHALF OF CONSULTANT SHALL BECOME THE PROPERTY OF THE OWNER UPON PAYMENT FOR SUCH WORK. THESE DRAWINGS HAVE BEEN PREPARED SPECIFICALLY FOR THIS PROJECT AND SHALL NOT BE USED FOR ANY OTHER PROJECT. BY ANY OTHER ENTITY OR IN ANY OTHER LOCATION.

811 Know what's below. Call before you dig. — CALL 811 TWO FULL BUSINESS DAYS, MAXIMUM 14 CALENDAR DAYS, BEFORE DIGGING.

No.:	Revision:	Date:
	650 IMPERIAL WAY BID SET	2020-09-24

NAPA COUNTY PUBLIC WORKS

PROJECT:
650 IMPERIAL WAY - HVAC SYSTEM UPGRADE
PROJECT PW 18-03

650 IMPERIAL WAY
NAPA, CA 94559

650 IMPERIAL WAY HVAC SYSTEM UPGRADE PW 18-03 BID SET – 2020/09/24

SHEET CONTENTS:
BUILDING ENERGY ANALYSIS

BID SET

PROJECT DATE:	2020/02/05
SCALE:	AS NOTED
SHEET ISSUED DATE:	2020/09/24
APPROVED BY:	MK
DESIGN BY:	MK/SC
DRAWN BY:	DC/JH/AJ
CHECKED BY:	MK/SC
PROJECT NO.:	PW 18-03 / 20003.00

SHEET NO.:
BE1.01

P:\2020\20003 – 650 IMPERIAL WAY – HVAC\DRAW\MK2-FILES\20003 – BE1-01.DWG – PLOTTED BY DAVID COLEMAN

STATE OF CALIFORNIA
Mechanical Systems
NRCC-MCH-E — CALIFORNIA ENERGY COMMISSION

CERTIFICATE OF COMPLIANCE			**NRCC-MCH-E**
Project Name:	650 IMPERIAL WAY BUILDING	**Report Page:**	**(Page 19 of 19)**
Project Address:	650 IMPERIAL WAY	**Date Prepared:**	9/22/2020

DOCUMENTATION AUTHOR'S DECLARATION STATEMENT
I certify that this Certificate of Compliance documentation is accurate and complete.

Documentation Author Name:	Abdi Jama	Documentation Author Signature:	Abdi Jama
Company:	MK2 Engineering, Inc.	Signature Date:	2020-09-22
Address:	5030 Business Center Dr # 150	CEA/ HERS Certification Identification (if applicable):	
City/State/Zip:	Fairfield CA 94534	Phone:	(707) 759-5260

RESPONSIBLE PERSON'S DECLARATION STATEMENT
I certify the following under penalty of perjury, under the laws of the State of California:
1. The information provided on this Certificate of Compliance is true and correct.
2. I am eligible under Division 3 of the Business and Professions Code to accept responsibility for the building design or system design identified on this Certificate of Compliance (responsible designer)
3. The energy features and performance specifications, materials, components, and manufactured devices for the building design or system design identified on this Certificate of Compliance conform to the requirements of Title 24, Part 1 and Part 6 of the California Code of Regulations.
4. The building design features or system design features identified on this Certificate of Compliance are consistent with the information provided on other applicable compliance documents, worksheets, calculations, plans and specifications submitted to the enforcement agency for approval with this building permit application.
5. I will ensure that a completed signed copy of this Certificate of Compliance shall be made available with the building permit(s) issued for the building, and made available to the enforcement agency for all applicable inspections. I understand that a completed signed copy of this Certificate of Compliance is required to be included with the documentation the builder provides to the building owner at occupancy.

Responsible Designer Name:	Mike Kiani	Responsible Designer Signature:	Mk Kiani
Company:	MK2 Engineers	Date Signed:	2020-09-22
Address:	5030 Business Center Drive, Suite #150	License:	M030804
City/State/Zip:	Fairfield California 94534	Phone:	707-759-5260

STATE OF CALIFORNIA
Mechanical Systems
NRCC-MCH-E — CALIFORNIA ENERGY COMMISSION

CERTIFICATE OF COMPLIANCE			**NRCC-MCH-E**
Project Name:	650 IMPERIAL WAY BUILDING	**Report Page:**	**(Page 16 of 19)**
Project Address:	650 IMPERIAL WAY	**Date Prepared:**	9/22/2020

M. COOLING TOWERS
This section does not apply to this project.

N. DECLARATION OF REQUIRED CERTIFICATES OF INSTALLATION
Selections have been made based on information provided in previous tables of this document. If any selection needs to be changed, please explain why in Table E Additional Remarks. These documents must be provided to the building inspector during construction and can be found online at https://www.energy.ca.gov/title24/2019standards/2019_compliance_documents/Nonresidential_Documents/NRCI/

Yes	No	Form/Title	Field Inspector Pass	Field Inspector Fail
●	○	NRCI-MCH-01-E - Must be submitted for all buildings	☐	☐

STATE OF CALIFORNIA
Mechanical Systems
NRCC-MCH-E — CALIFORNIA ENERGY COMMISSION

CERTIFICATE OF COMPLIANCE			**NRCC-MCH-E**
Project Name:	650 IMPERIAL WAY BUILDING	**Report Page:**	**(Page 13 of 19)**
Project Address:	650 IMPERIAL WAY	**Date Prepared:**	9/22/2020

J. VENTILATION AND INDOOR AIR QUALITY

(E)VAV2.16 H	Office space	142.4			21.4	0	0	DCV	NA: Not required per §120.1(d)3
								Occ Sensor	NA: Not required space type
(E)VAV2.16A H	Office space	152			22.8	0	0	DCV	NA: Not required per §120.1(d)3
								Occ Sensor	NA: Not required space type
(N)VAV2.17 H	Office space	1120			168	0	0	DCV	NA: Not required per §120.1(d)3
								Occ Sensor	NA: Not required space type
(E)VAV2.18 H	Office space	822.4			123.4	0	0	DCV	NA: Not required per §120.1(d)3
								Occ Sensor	NA: Not required space type
17	Total System Required Min OA CFM				1048	18	Ventilation for this System Complies?		Yes

[1] *FOOTNOTES: System CFM should include both mechanical and natural ventilation for the zone/system*

[2] *Air filtration requirements apply to the following three system types per §120.1(c)1A : space conditioning systems utilizing ducts to supply air to occupiable space; supply-only ventilation systems providing outside air to occupiable space; supply side of balanced ventilation systems including heat recovery and energy recovery ventilation systems providing outside air to occupiable space.*

[3] *Uniform Mechanical Code may have more stringent ventilation requirements; the most stringent code requirement takes precedence.*

[4] *See Standards Tables 120.1-A and 120.1-B.*

[5] *For lecture halls with fixed seating, the expected number of occupants shall be shall be determined in accordance with the California Building Code.*

[6] *§120.2(e)1 requires systems serving rooms that are required by §180.1(c) to have lighting occupancy sensing controls to also have occupancy sensing zone controls for ventilation. Examples of spaces which require lighting occupancy sensors include offices 250ft² or smaller, multipurpose rooms less than 1,000 ft², classrooms, conference rooms, restrooms, aisles and open areas in warehouses, library book stack aisles, corridors, stairwells, parking garages, and loading and unloading zones, unless excepted by §130.1(c).*

STATE OF CALIFORNIA
Mechanical Systems
NRCC-MCH-E — CALIFORNIA ENERGY COMMISSION

CERTIFICATE OF COMPLIANCE			**NRCC-MCH-E**
Project Name:	650 IMPERIAL WAY BUILDING	**Report Page:**	**(Page 10 of 19)**
Project Address:	650 IMPERIAL WAY	**Date Prepared:**	9/22/2020

J. VENTILATION AND INDOOR AIR QUALITY

(E)VAV2.10 H	Office space	334			50.1	0	0	DCV	Provided per §120.1(d)4
								Occ Sensor	NA: Not required space type
(E)VAV2.11 H	Office space	592.3			88.8	0	0	DCV	Provided per §120.1(d)4
								Occ Sensor	NA: Not required space type
(E)VAV2.12 H	Office space	488			73.2	0	0	DCV	Provided per §120.1(d)4
								Occ Sensor	NA: Not required space type
(E)VAV-1A H		635			95.2	0	0	DCV	Provided per §120.1(d)4
								Occ Sensor	NA: Not required space type
17	Total System Required Min OA CFM				1422	18	Ventilation for this System Complies?		Yes

04		05			06		07	
System Name	HU-2	System Design OA CFM Airflow[1]		1588	System Design Transfer Air CFM	0	Air Filtration per §120.1(c) and §141.0(b)2 [2]	Provided per §120.1(e) (NR and Hotel/Motel))
08	09	10	11	12	13	14	15	16

Space Name or Item Tag	Mechanical Ventilation Required per §120.1(c)3 [3]				Exh. Vent per §120.1(c)4		DCV or Sensor Controls per §120.1(d)3, §120.1(d)5, and §120.1(e)3 [6]
	Occupancy Type[4]	Conditioned Floor Area (ft²)	# of Shower heads/ toilets	# of people[5]	Required Min OA CFM	Required Min CFM	Provided per Design CFM
(E)VAV-1.5 H	Office space	984.6			147.7	0	0

STATE OF CALIFORNIA
Mechanical Systems
NRCC-MCH-E — CALIFORNIA ENERGY COMMISSION

CERTIFICATE OF COMPLIANCE			**NRCC-MCH-E**
Project Name:	650 IMPERIAL WAY BUILDING	**Report Page:**	**(Page 17 of 19)**
Project Address:	650 IMPERIAL WAY	**Date Prepared:**	9/22/2020

O. DECLARATION OF REQUIRED CERTIFICATES OF ACCEPTANCE
Selections have been made based on information provided in previous tables of this document. If any selection needs to be changed, please explain why in Table E Additional Remarks. These documents must be provided to the building inspector during construction and can be found online at https://www.energy.ca.gov/title24/2019standards/2019_compliance_documents/Nonresidential_Documents/NRCA/

Yes	No	Form/Title	Field Inspector Pass	Field Inspector Fail
●	○	NRCA-MCH-02-A - Outdoor Air must be submitted for all newly installed HVAC units. Note: MCH-02-A can be performed in conjunction with MCH-07-A Supply Fan VFD Acceptance (if applicable) since testing activities overlap.	☐	☐
○	●	NRCA-MCH-03-A - Constant Volume Single Zone HVAC NOTE: This form does not automatically move to "Yes". If Constant Volume Single Zone HVAC Systems are included in the scope, permit applicant should move this form to "Yes".	☐	☐
○	●	NRCA-MCH-04-A - Air Distribution Duct Leakage	☐	☐
●	○	NRCA-MCH-05-A - Air Economizer Controls	☐	☐
●	○	NRCA-MCH-06-A Demand Control Ventilation Systems must be submitted for all systems required to employ demand controlled ventilation (refer to §120.1(c)3) can vary outside ventilation flow rates based on maintaining interior carbon dioxide (CO_2) concentration setpoints.	☐	☐
●	○	NRCA-MCH-07-A Supply Fan Variable Flow Controls	☐	☐
○	●	NRCA-MCH-08-A Valve Leakage Test	☐	☐
○	●	NRCA-MCH-09-A Supply Water Temperature Reset Controls	☐	☐
○	●	NRCA-MCH-10-A Hydronic System Variable Flow Controls	☐	☐
●	○	NRCA-MCH-11-A Automatic Demand Shed Controls	☐	☐
○	●	NRCA-MCH-12-A FDD for Packaged Direct Expansion Units	☐	☐
●	○	NRCA-MCH-13-A Automatic FDD for Air Handling Units and Zone Terminal Units Acceptance	☐	☐
○	●	NRCA-MCH-14-A Distributed Energy Storage DX AC Systems Acceptance NOTE: This form does not automatically move to "Yes". If Distributed Energy System DX AC Systems are included in teh scope permit applicant should move this form to "Yes".	☐	☐
○	●	NRCA-MCH-15-A Thermal Energy Storage (TES) System Acceptance NOTE: This form does not automatically move to "Yes". If Chilled water Storage, Ice-on-Coil Internal Melt, Ice-on-Coil External melt, Ice Harvester, Brine, Ice-Slurry, Eutecti Salt, Clathrate Hydrate Slurry (CHS), Cryogenic or Encapsulated (Ice Ball) Systems are included in the scope, permit applicant should move this form to "Yes".	☐	☐
●	○	NRCA-MCH-16-A Supply Air Temperature Reset Controls	☐	☐
○	●	NRCA-MCH-17-A Condenser Water Temperature Reset Controls	☐	☐
○	●	NRCA-MCH-18-A Energy Management Control Systems	☐	☐

STATE OF CALIFORNIA
Mechanical Systems
NRCC-MCH-E — CALIFORNIA ENERGY COMMISSION

CERTIFICATE OF COMPLIANCE			**NRCC-MCH-E**
Project Name:	650 IMPERIAL WAY BUILDING	**Report Page:**	**(Page 14 of 19)**
Project Address:	650 IMPERIAL WAY	**Date Prepared:**	9/22/2020

K. TERMINAL BOX CONTROLS
This table is used to demonstrate compliance with prescriptive zone control requirements in §140.4(d).

01	02	03	04	05	06	07	08	09	10	11	12
		Design			Deadband Compliance			Reheated, Recooled, Mixed Air Compliance			
Zone/System/VAV Box Name or Item Tag	Zonal Control Strategy per §140.4(d)	Peak Primary Airflow CFM	Primary Air in Deadband CFM	Reheated Recooled Mixed Airflow CFM	Outside Air CFM	20% (30% if no DCV of Peak Primary Airflow CFM	Max Deadband Airflow CFM	50% of Peak Primary Airflow	1st Stage Modulates <=95 °F and Maintains DB Rate?	2nd Stage Modulates from DB Flow to Heating Max Flow?	Complies
(N)VAV2.11	VAV with DDC @ zone	1400	630	700	165.3	280	280	700	Yes	Yes	No
(N)VAV2.12	VAV with DDC @ zone	1400	630	700	179.4	280	280	700	Yes	Yes	No
(N)VAV2.13	VAV with DDC @ zone	1400	630	700	162.3	280	280	700	Yes	Yes	No
(E)VAV2.14	VAV with DDC @ zone	500	225	200	145.4	100	145.4	250	Yes	Yes	No
(E)VAV2.15	VAV with DDC @ zone	500	225	200	73.8	100	100	250	Yes	Yes	No
(E)VAV2.16	VAV with DDC @ zone	500	225	200	22.5	100	100	250	Yes	Yes	No
(E)VAV2.16A	VAV with DDC @ zone	500	225	200	24.2	100	100	250	Yes	Yes	No
(N)VAV2.17	VAV with DDC @ zone	1400	630	700	168	280	280	700	Yes	Yes	No
(E)VAV2.18	VAV with DDC @ zone	3000	1350	1500	135.3	600	600	1500	Yes	Yes	No
(E)VAV1.1 H	VAV with DDC @ zone	800	360	300	111.9	160	160	400	Yes	Yes	No
(E)VAV1.2 H	VAV with DDC @ zone	600	270	250	132.3	120	132.3	300	Yes	Yes	No
(E)VAV1.3 H	VAV with DDC @ zone	600	270	250	152.4	120	152.4	300	Yes	Yes	No
(E)VAV1.4 H	VAV with DDC @ zone	600	270	250	38.8	120	120	300	Yes	Yes	No
(E)VAV2.1 H	VAV with DDC @ zone	600	270	250	43.2	120	120	300	Yes	Yes	No
(E)VAV2.2 H	VAV with DDC @ zone	600	270	250	87.2	120	120	300	Yes	Yes	No
(E)VAV2.3 H	VAV with DDC @ zone	600	270	250	46.1	120	120	300	Yes	Yes	No
(E)VAV2.4 H	VAV with DDC @ zone	600	270	250	68	120	120	300	Yes	Yes	No
(E)VAV2.5 H	VAV with DDC @ zone	600	270	250	73.8	120	120	300	Yes	Yes	No
(E)VAV2.6 H	VAV with DDC @ zone	600	270	250	102.3	120	120	300	Yes	Yes	No
(E)VAV2.7 H	VAV with DDC @ zone	600	270	250	73.6	120	120	300	Yes	Yes	No

STATE OF CALIFORNIA
Mechanical Systems
NRCC-MCH-E — CALIFORNIA ENERGY COMMISSION

CERTIFICATE OF COMPLIANCE			**NRCC-MCH-E**
Project Name:	650 IMPERIAL WAY BUILDING	**Report Page:**	**(Page 11 of 19)**
Project Address:	650 IMPERIAL WAY	**Date Prepared:**	9/22/2020

J. VENTILATION AND INDOOR AIR QUALITY

(N)VAV-1.6 H	Office space	576.2			86.4	0	0	DCV	Provided per §120.1(d)4
								Occ Sensor	NA: Not required space type
(N)VAV-1.7 H	Break room	400			200	0	0	DCV	Provided per §120.1(d)4
								Occ Sensor	NA: Not required space type
(N)VAV-1.8 H	All others	651			97.6	0	0	DCV	Provided per §120.1(d)4
								Occ Sensor	NA: Not required space type
(E)VAV_1.9 H	Office space	1424.3			213.6	0	0	DCV	Provided per §120.1(d)4
								Occ Sensor	NA: Not required space type
(N)VAV_1.10 H	Office space	1642.5			246.4	0	0	DCV	Provided per §120.1(d)4
								Occ Sensor	NA: Not required space type
(N)VAV_1.11 H	Office space	2351			352.6	0	0	DCV	Provided per §120.1(d)4
								Occ Sensor	NA: Not required space type
VAV-1.12 H	Office space	1621			243.2	0	0	DCV	Provided per §120.1(d)4
								Occ Sensor	NA: Not required space type
17	Total System Required Min OA CFM				1588	18	Ventilation for this System Complies?		Yes

STATE OF CALIFORNIA
Mechanical Systems
NRCC-MCH-E — CALIFORNIA ENERGY COMMISSION

CERTIFICATE OF COMPLIANCE			**NRCC-MCH-E**
Project Name:	650 IMPERIAL WAY BUILDING	**Report Page:**	**(Page 18 of 19)**
Project Address:	650 IMPERIAL WAY	**Date Prepared:**	9/22/2020

O. DECLARATION OF REQUIRED CERTIFICATES OF ACCEPTANCE

○	●	NRCA-MCH-19-A Occupancy Sensor Controls	☐	☐
○	●	NRCA-MCH-20 Multi-Family Ventilation	☐	☐
○	●	NRCA-MCH-21 Multi-Family Envelope Leakage	☐	☐

P. DECLARATION OF REQUIRED CERTIFICATES OF VERIFICATION
Selections have been made based on information provided in previous tables of this document. If any selection needs to be changed, please explain why in Table E Additional Remarks. These documents must be completed by a HERS Rater and provided to the building inspector during construction. The final documents must be created by a HERS Provider's registry, but drafts can be found online at https://www.energy.ca.gov/title24/2019standards/2019_compliance_documents/Nonresidential_Documents/NRCV/

Yes	No	Form/Title	Field Inspector Pass	Field Inspector Fail
○	●	NRCV-MCH-04-H Duct Leakaage Test *NOTE: Must be completed by a HERS Rater*	☐	☐
○	●	NRCV-MCH-24 Enclosure Air Leakaage Worksheet *NOTE: Must be completed by a HERS Rater*	☐	☐
○	●	NRCV-MCH-27 High-rise Residential *NOTE: Must be completed by a HERS Rater*	☐	☐
○	●	NRCV-MCH-32 Local Mechanical Exhaust *NOTE: Must be completed by a HERS Rater*	☐	☐

Q. MANDATORY MEASURES DOCUMENTATION LOCATION
This table is used to indicate where mandatory measures are documented in the plan set or construction documentation.

01		02
Compliance with Mandatory Measures documented through MCH Mandatory Measures Note Block	Yes	Plan sheet or construction document location
		M-Sheets

STATE OF CALIFORNIA
Mechanical Systems
NRCC-MCH-E — CALIFORNIA ENERGY COMMISSION

CERTIFICATE OF COMPLIANCE			**NRCC-MCH-E**
Project Name:	650 IMPERIAL WAY BUILDING	**Report Page:**	**(Page 15 of 19)**
Project Address:	650 IMPERIAL WAY	**Date Prepared:**	9/22/2020

K. TERMINAL BOX CONTROLS

(E)VAV2.8 H	VAV with DDC @ zone	700	315	250	127.6	140	140	350	Yes	Yes	No
(E)VAV2.9 H	VAV with DDC @ zone	600	270	250	57.3	120	120	300	Yes	Yes	No
(E)VAV2.10 H	VAV with DDC @ zone	600	270	250	50.1	120	120	300	Yes	Yes	No
(E)VAV2.11 H	VAV with DDC @ zone	600	270	250	88.8	120	120	300	Yes	Yes	No
(E)VAV2.12 H	VAV with DDC @ zone	600	270	250	73.2	120	120	300	Yes	Yes	No
(E)VAV-1A H	VAV with DDC @ zone	600	270	250	95.3	120	120	300	Yes	Yes	No
(E)VAV-1.5 H	VAV with DDC @ zone	900	405	250	147.7	180	180	450	Yes	Yes	No
(N)VAV-1.6 H	VAV with DDC @ zone	600	270	250	86.4	120	120	300	Yes	Yes	No
(N)VAV-1.7 H	VAV with DDC @ zone	600	270	250	200	120	200	300	Yes	Yes	No
(N)VAV-1.8 H	VAV with DDC @ zone	600	270	250	97.6	120	120	300	Yes	Yes	No
(E)VAV_1.9 H	VAV with DDC @ zone	1500	675	750	213.6	300	300	750	Yes	Yes	No
(N)VAV_1.10 H	VAV with DDC @ zone	1400	630	650	246.4	280	280	700	Yes	Yes	No
(N)VAV_1.11 H	VAV with DDC @ zone	2000	900	700	352.7	400	400	1000	Yes	Yes	No
VAV-1.12 H	VAV with DDC @ zone	2000	900	680	243.2	400	400	1000	Yes	Yes	No
(N)VAV2.11 H	VAV with DDC @ zone	2000	900	700	165.3	400	400	1000	Yes	Yes	No
(N)VAV2.12 H	VAV with DDC @ zone	3000	1350	650	179.4	600	600	1500	Yes	Yes	No
(N)VAV2.13 H	VAV with DDC @ zone	2000	900	650	162.3	400	400	1000	Yes	Yes	No
(E)VAV2.14 H	VAV with DDC @ zone	1400	630	700	136	280	280	700	Yes	Yes	No
(E)VAV2.15 H	VAV with DDC @ zone	600	270	250	69.1	120	120	300	Yes	Yes	No
(E)VAV2.16 H	VAV with DDC @ zone	600	270	250	21.4	120	120	300	Yes	Yes	No
(E)VAV2.16A H	VAV with DDC @ zone	600	270	250	22.8	120	120	300	Yes	Yes	No
(N)VAV2.17 H	VAV with DDC @ zone	2000	900	650	168	400	400	1000	Yes	Yes	No
(E)VAV2.18 H	VAV with DDC @ zone	1550	697.5	750	123.4	310	310	775	Yes	Yes	No

L. DISTRIBUTION (DUCTWORK and PIPING)
This section does not apply to this project.

STATE OF CALIFORNIA
Mechanical Systems
NRCC-MCH-E — CALIFORNIA ENERGY COMMISSION

CERTIFICATE OF COMPLIANCE			**NRCC-MCH-E**
Project Name:	650 IMPERIAL WAY BUILDING	**Report Page:**	**(Page 12 of 19)**
Project Address:	650 IMPERIAL WAY	**Date Prepared:**	9/22/2020

J. VENTILATION AND INDOOR AIR QUALITY

04		05			06		07	
System Name	HU-3	System Design OA CFM Airflow[1]		1048	System Design Transfer Air CFM	0	Air Filtration per §120.1(c) and §141.0(b)2 [2]	Provided per §120.1(e) (NR and Hotel/Motel))
08	09	10	11	12	13	14	15	16

Space Name or Item Tag	Mechanical Ventilation Required per §120.1(c)3 [3]				Exh. Vent per §120.1(c)4		DCV or Sensor Controls per §120.1(d)3, §120.1(d)5, and §120.1(e)3 [6]
	Occupancy Type[4]	Conditioned Floor Area (ft²)	# of Shower heads/ toilets	# of people[5]	Required Min OA CFM	Required Min CFM	Provided per Design CFM
(N)VAV2.11 H	Office space	1102			165.3	0	0
(N)VAV2.12 H	Office space	1196			179.4	0	0
(N)VAV2.13 H	Office space	1082			162.3	0	0
(E)VAV2.14 H	Office space	906.5			136	0	0
(E)VAV2.15 H	Office space	460.5			69.1	0	0

NAPA COUNTY CALIFORNIA
A Tradition of Stewardship
A Commitment to Service

MK2 ENGINEERS
Green Valley Executive Center
5030 Business Center Drive,
Suite 150
Fairfield, CA 94534
(707) 759-5260
www.mk2eng.com

REGISTERED PROFESSIONAL ENGINEER — MIKE KIANI — M030804 — 12-31-20 — MECHANICAL — STATE OF CALIFORNIA

THE DRAWINGS, PLANS, SPECIFICATIONS, ELECTRONIC DATABASE AND OTHER INSTRUMENTS OF PROFESSIONAL SERVICE PREPARED BY OR ON BEHALF OF CONSULTANT SHALL BECOME THE PROPERTY OF THE OWNER UPON PAYMENT FOR SUCH WORK. THESE DRAWINGS HAVE BEEN PREPARED SPECIFICALLY FOR THIS PROJECT AND SHALL NOT BE USED FOR ANY OTHER PROJECT, BY ANY OTHER ENTITY OR IN ANY OTHER LOCATION.

811 Know what's below. Call before you dig.
CALL 811 TWO FULL BUSINESS DAYS, MAXIMUM 14 CALENDAR DAYS, BEFORE DIGGING.

No.:	Revision:	Date:
	650 IMPERIAL WAY BID SET	2020-09-24

NAPA COUNTY PUBLIC WORKS

PROJECT:
650 IMPERIAL WAY - HVAC SYSTEM UPGRADE
PROJECT PW 18-03

650 IMPERIAL WAY
NAPA, CA 94559

SHEET CONTENTS:
BUILDING ENERGY ANALYSIS

BID SET

PROJECT DATE:	2020/02/05
SCALE:	AS NOTED
SHEET ISSUED DATE:	2020/09/24
APPROVED BY:	MK
DESIGN BY:	MK/SC
DRAWN BY:	DC/JH/AJ
CHECKED BY:	MK/SC
PROJECT NO.:	PW 18-03 / 20003.00

SHEET NO.:
BE1.02

650 IMPERIAL WAY HVAC SYSTEM UPGRADE PW 18-03 BID SET - 2020/09/24

P:\2020\20003 - 650 IMPERIAL WAY - HVAC\DRAW\MK2-FILES\20003 - BE1-02.DWG - PLOTTED BY DAVID COLEMAN

PLUMBING ABBREVIATIONS

AFF	ABOVE FINISHED FLOOR	INT	INTERIOR
ARCH	ARCHITECT / ARCHITECTURAL	INV	INVERT
BJ	BETWEEN JOIST	LBS	POUNDS
BLDG	BLUILDING	MAX	MAXIMUM
CLG	CEILING	MECH	MECHANICAL
CONN	CONNECTION	MIN	MINIMUM
CONT	CONTINUATION	(N)	NEW
COORD	COOORDINATION	NIC	NOT IN CONTRACT
CONST	CONSTRUCTION	NO	NORMIALLY OPEN
DN	DOWN	NTS	NOT TO SCALE
DWGS	DRAWNGS	OC	ON CENTER
(E)	EXISTING	PH	PHASE
ELEV	ELEVATION	PRESS	PRESSURE
EQUIP	EQUIPMENT	PSI	POUNDS PER SQUARE INCH
EXT	EXTERIOR	QTY	QUANTITY
F	DEGREES FAHRENHEUT	REQS	REQUIREMENTS
FFE	FINISHED FLOOR	RM	ROOM
FLR	FLOOR	SOV	SHUT OFF VALVE
FT	FEET	SPEC	SPECIFICATION
GPM	GALLONS PER MINUTE	SQ	SQUARE
GA	GAUGE	STD	STANDARD
GC	GENERAL CONTRACTOR	STRUCT	STRUCTURAL
GW	GRAY WATER	TYP	TYPICAL
HP	HORSEPOWER	UL	UNDERWRITER'S LABORATORIES
HR	HOUR	UON	UNLESS OTHERWISE NOTED
ID	INSIDE DIAMETER	W/	WITH
IE	INVERT ELEVATION	WH	WATER HEATER
IN	INCH	WT	WEIGHT

PLUMBING CONSTRUCTION NOTES

1. THE PLUMBING SYSTEM DESIGN, INSTALLATION AND MATERIALS SHALL CONFORM TO THE 2019 EDITION OF THE UNIFORM PLUMBING CODE (IAPMO), WITH 2019 CALIFORNIA AMENDMENTS.
2. DRAWINGS INDICATE GENERAL ARRANGEMENTS OF EQUIPMENT, PIPING, FIXTURES, ETC. CONTRACTOR SHALL COORDINATE ALL WORK ON THESE DRAWINGS AND SPECIFICATION WITH ALL DISCIPLINES AND TRADES PRIOR TO SUBMITTAL OF BID AND INSTALLATION OF SYSTEMS.
3. CONTRACTOR TO KEEP ON SITE AN UP TO DATE AS-BUILT AND PROVIDE TO OWNER AT THE END OF THE PROJECT.
4. ALL CLEANOUTS TO BE ACCESSIBLE AND LOCATED AS PER CODE REQUIREMENTS.
5. INSTALLER SHALL VISIT THE SITE PRIOR TO SUBMITTAL OF BID AND FAMILIARIZE HIMSELF WITH EXISTING CONDITIONS. SUBMITTAL OF BID WILL VERIFY THAT THE CONTRACTOR HAS VISITED THE SITE.
6. ANY DEVIATION FROM THE DRAWINGS OR SPECIFICATIONS SHALL BE BROUGHT TO THE ATTENTION OF THE ENGINEER PRIOR TO INSTALLATION.
7. INSTALL UNDERGROUND PIPING CLEAR OF LOCAL BEARING FOOTING OR AS DIRECTED BY STRUCTURAL ENGINEER.
8. ALL PLUMBING FIXTURE LOCATIONS (WATER CLOSETS, FLOOR DRAINS, LAVATORIES, STUB-OUTS, ETC.) ARE DIAGRAMMATIC, AND CONTRACTOR SHALL REFER TO ARCHITECTURAL EQUIPMENT DRAWINGS FOR EXACT LOCATIONS AND ROUGH-INS.
9. FIXTURES SHALL MEET THE FLOW REQUIREMENTS OUTLINED IN THE CALIFORNIA RESIDENTIAL ENERGY CONSERVATION STANDARDS.
10. ALL WATER ROUGH-INS TO BE TERMINATED WITH SHUTOFF VALVES STOPS AND UNIONS PRIOR TO CONNECTION TO EQUIPMENT AND STOPS TO PLUMBING FIXTURES.
11. IF WATER PRESSURE AT THE INCOMING SERVICE EXCEEDS 80 PSI, PLUMBING INSTALLER SHALL FURNISH AND INSTALL AN APPROVED PRESSURE REDUCING VALVE SET TO 60 PSI.
12. INSULATE ALL EXPOSED DRAIN, WASTE AND HOT WATER SUPPLY PIPING AT HANDICAP LAVATORIES WITH 'HANDI-LAV' GUARD KITS AS MANUFACTURED BY TRUEBRO INC.
13. INSTALLER TO PROVIDE THROUGH PENETRATION FIRE STOPS IN ACCORDANCE WITH UBC SECTION 714. FOR NEW AND EXISTING PIPING PASSING THROUGH FIRE RATED WALLS.
14. ALL PIPES SHALL BE SUPPORTED PER THE "SMACNA GUIDELINES FOR SEISMIC RESTRAINT OF MECHANICAL SYSTEMS AND PLUMBING SYSTEMS.
15. HORIZONTAL DRAINAGE PIPING SHALL RUN IN PRACTICAL ALIGNMENT AND A UNIFORM SLOPE OF NOT LESS THAN ONE FOURTH (1/4) OF AN INCH PER FOOT OR TWO PERCENT TOWARD THE POINT OF DISPOSAL. UNLESS OTHERWISE NOTED.
16. SEE 4/P6.00 FOR INSULATION REQUIREMENTS.

PLUMBING SYSTEMS SEISMIC BRACING GUIDELINES

ALL PLUMBING PIPING AND EQUIPMENT SHALL BE BRACED OR ANCHORED TO RESIST A SEISMIC FORCE ACTING IN ANY DIRECTION USING THE FOLLOWING CRITERIA:

1. THE TOTAL DESIGN LATERAL SEISMIC FORCE SHALL BE DETERMINED FROM ASCE 7-05 EQUATION (13.3-1). FORCES SHALL BE APPLIED IN THE HORIZONTAL DIRECTIONS, WHICH RESULT IN THE MOST CRITICAL LOADINGS FOR DESIGN. IN ADDITION, THE COMPONENT SHALL BE DESIGNED FOR A CONCURRENT VERTICAL FORCE PER SECTION 13.3.1.
2. THE VALUE OF Ap (COMPONENT AMPLIFICATION FACTOR) AND Rp (COMPONENT RESPONSE MODIFICATION FACTOR) OF ASCE 7-05 SECTION 13.3.1 SHALL BE SELECTED FROM TABLE 13.6-1. THE VALUE OF Ip (COMPONENT IMPORTANCE FACTOR) AND Sds (SPECTRAL ACCELERATION- SHORT PERIOD) SHALL BE DETERMINED FROM SECTION 13.1.3 AND 11.4.4, RESPECTIVELY.

WHERE ANCHORAGE DETAILS ARE NOT SHOWN ON THE DRAWINGS, THE FIELD INSTALLATION SHALL BE SUBJECT TO THE APPROVAL OF THE STRUCTURAL ENGINEER, PLUMBING AND/OR MECHANICAL ENGINEER.

PLUMBING SYMBOLS & LEGEND

GENERAL SYMBOLS

1 — NUMBERED CONSTRUCTION NOTE OR SHEET NOTE.

EQUIPMENT DESIGNATION.

DETAIL NUMBER.

SHEET NUMBER ON WHICH THE DETAIL RESIDES.

LEGEND

SYMBOL	ABBREVIATION	IDENTIFICATION
LPG	LPG	PROPANE GAS
	S OR W	SOIL OR WASTE BELOW GRADE
GW GW	GW	GRAY WATER
	V	VENT
CD	CD	CONDENSATE DRAIN
	CW	DOMESTIC COLD WATER
	HW	DOMESTIC HOT WATER
	HWR	DOMESTIC HOT WATER RETURN
	GCO/FCO	GRADE CLEAN-OUT/FLOOR CLEAN-OUT
	CO	CLEAN-OUT
		CAP ON END OF PIPE
	POC	POINT OF CONNECTION
		RISER DOWN (ELBOW)
		RISER UP
		RISE OR DROP
		VALVE IN VERTICAL
CA	CA	COMPRESSED AIR
	FD	FLOOR DRAIN
	FS	FLOOR SINK
	BV	BALL VALVE
	GV	GATE VALVE
	CV	CHECK VALVE
	FC	FLANGED CONNECTION
		UNION
	BFP	BACKFLOW PREVENTER
	PRV	PRESSURE REDUCING VALVE
		DIRECTION OF FLOW

SHEET INDEX

P0.01	ABBREVIATIONS, LEGENDS AND NOTES PLUMBING
P2.02	WASTE - ROOF PLAN - PLUMBING
P3.02	GAS - ROOF PLAN - PLUMBING
P7.01	DETAILS - PLUMBING

GENERAL NOTES

1. ALL WORK TO BE PERFORMED UNDER THE DIRECTION OF THE OWNER'S REPRESENTATIVE.
2. ORDINANCES AND REGULATIONS: ALL WORK SHALL CONFORM TO APPLICABLE REQUIREMENTS OF LEGAL AUTHORITIES HAVING JURISDICTION. ORDINANCES SHALL GOVERN OVER DRAWINGS UNLESS THE DRAWINGS REQUIRE HIGHER STANDARDS OR LARGER SIZES.
3. CODES AND STANDARDS: WORK SHALL BE PERFORMED IN COMPLIANCE WITH LATEST EDITION OF THE FOLLOWING REFERENCED CODES AND STANDARDS AS AMENDED TO THE DATE OF THESE DRAWINGS.
   A. CALIFORNIA MECHANICAL CODE (CMC). 2019
   B. CALIFORNIA PLUMBING CODE (CPC). 2019
   C. CALIFORNIA ELECTRICAL CODE (CEC). 2019
   D. CALIFORNIA BUILDING CODE (CBC). 2019
   E. NATIONAL FIRE PROTECTION ASSOCIATION (NFPA). 2019
   F. CALIFORNIA ADMINISTRATIVE CODE. 2019
   G. OCCUPATIONAL SAFETY AND HEALTH ADMINISTRATION (OSHA).
   H. AMERICAN NATIONAL STANDARDS INSTITUTE (ANSI).
   I. AMERICAN SOCIETY FOR TESTING AND MATERIALS (ASTM).
   J. UNDERWRITER'S LABORATORY (UL).
   K. CALIFORNIA ENERGY CODE (CA) 2019
   L. GREEN BUILDING STANDARD CODE (CA) (CALGREEN) 2019.
4. THE CONTRACTOR IS RESPONSIBLE FOR ALL ITEMS DETAILED IN THESE NOTES.
5. COORDINATE THE LOCATION OF ALL PLUMBING FIXTURES AND CONNECTIONS WITH THE ARCHITECTURAL FLOOR PLANS AND ROOM ELEVATIONS. IF A QUESTION ARISES AS TO THE LOCATION OF ANY PLUMBING DISTRIBUTION OR PLUMBING FIXTURE DEVICE, COORDINATE LOCATION WITH THE THE DESIGN ENGINEER.
6. PRIOR TO COMMENCING ANY WORK, EXAMINE THE SITE IN DETAIL, THOROUGHLY REVIEW ALL PLANS, SPECIFICATIONS AND ANY OTHER DATA SUPPLIED BY THE OWNER. VERIFY ALL CONDITIONS AND DIMENSIONS. ANY DISCREPANCY OR INCONSISTENCY SHALL BE REPORTED TO THE ENGINEER.
7. RESOLVE CONFLICTS ON THE DRAWINGS AND/OR THE SPECIFICATIONS WITH THE ENGINEER PRIOR TO SUBMITTING BID OR COMMENCING WORK.
8. COORDINATE WORK WITH ALL OTHER TRADES PRIOR TO ANY FABRICATION OR INSTALLATION OF WORK.
9. COORDINATE THE LOCATION OF ALL ROOF OPENINGS, AND EQUIPMENT LOCATIONS WITH THE ARCHITECTURAL AND STRUCTURAL PLANS, PRIOR TO ANY INSTALLATION.

PLUMBING GENERAL NOTES

1. GENERAL NOTES, SYMBOL LIST AND DETAILS ARE APPLICABLE TO ALL DRAWINGS.
2. COORDINATE WORK OF THIS SECTION WITH THAT OF OTHER SECTIONS.
3. COORDINATE ROOF PENETRATIONS WITH WORK OF OTHER SECTIONS AND WITH FLASHING REQUIREMENTS.
4. COPPER PIPING AND FITTINGS SPECIFIED ARE TO BE PROVIDED. NO SUBSTITUTES SHALL BE ALLOWED WITHOUT PRIOR CONSENT FROM ARCHITECT/ENGINEER.
5. RUN PLUMBING PIPING CONCEALED, UNLESS SPECIFIED OTHERWISE, AND CLEAR OF CEILING INSERTS.
6. ALL WORK SHALL BE COORDINATED WITH ALL TRADES INVOLVED. OFFSETS IN PIPING AND TRANSITIONS AROUND OBSTRUCTIONS SHALL BE PROVIDED AT NO ADDITIONAL COST TO THE OWNER.
7. VERIFY ALL EQUIPMENT CONNECTIONS WITH MANUFACTURER'S CERTIFIED DRAWINGS. FIELD VERIFY AND COORDINATE ALL DIMENSIONS BEFORE FABRICATION.
8. ACCESS PANELS SHALL BE PROVIDED TO SERVICE SHUTOFF VALVES AND ALL CONCEALED PLUMBING EQUIPMENT.
9. ALL SERVICE ACCESS DOORS SHALL BE HINGED AND LOCKABLE (FOR FINISH COORDINATE WITH ARCHITECT).
10. SUPPORT ALL EQUIPMENT, PIPING FROM BUILDING STRUCTURE TO PROVIDE A VIBRATION FREE INSTALLATION. NOTIFY ARCHITECT AND STRUCTURAL ENGINEER OF ALL WEIGHTS AND METHODS OF SUPPORT.
11. ALL CONTROL WIRE AND CONDUIT SHALL COMPLY WITH NEC AND DIVISION 26 OF TERMINAL DEVICES.
12. INTERNAL FLOW DIMENSIONS ARE SHOWN FOR PIPING.
13. ALL MATERIALS AND EQUIPMENT SHALL BE NEW.
14. ALL NEW EQUIPMENT SHALL BE BALANCED AS PER DRAWINGS. IF DRAWINGS DO NOT PROVIDE INFORMATION NECESSARY TO PROPERLY BALANCE THE EQUIPMENT, DATA FROM MANUFACTUER SHALL BE USED.
15. PROVIDE LPG WITH FLEXIBLE CONNECTION ON ALL PIPING CONNECTING TO PLUMBING EQUIPMENT.
16. INSULATE PIPING AND DUCTWORK AS SPECIFIED: PERFORM TESTS SPECIFIED BEFORE INSULATING.
17. ALL CONDENSATE DRAIN LINES, MINIMUM 3/4", SHALL BE PIPED FULL SIZE OF THE UNIT DRAIN OUTLET, WITH "P" TRAP, CONNECTED TO PLUMBING AS INDICATED ON DRAWINGS.
18. IT IS NOT OUR INTENTION TO SHOW EVERY ACCESS DOOR REQUIRED. WHERE POSSIBLE, ACCESS DOORS MUST BE ALIGNED IN STRAIGHT RUNS WHERE MULTIPLE DOORS ARE VISIBLE. LOCATE ALL DEVICES REQUIRING ACCESS DOORS IN SUCH MANNER THAT THE LOCATION OF MULTIPLE DEVICES TAKE ADVANTAGE OF THE LEAST NUMBER OF ACCESS DOORS. COORDINATE LOCATIONS OF ACCESS DOORS WITH OTHER TRADES AND WITH THE ARCHITECT. SUBMIT DRAWINGS SHOWING ALL ACCESS DOORS; TO BE REVIEWED BY THE ARCHITECT AND ENGINEER, PRIOR TO INSTALLATION.

MEAN AND METHODS

1. CONTRACTOR SHALL BE SOLELY RESPONSIBLE FOR THE MEANS, METHODS, TECHNIQUES, SEQUENCES, AND PROCEDURES OF CONSTRUCTION.
2. THE CONTRACTOR SHALL DETERMINE THE MEANS AND METHODS REGARDING CONSTRUCTION STAGING. CONTRACTOR TO ENSURE THAT EXISTING OPERATIONS REMAIN UNINTERRUPTED DURING SWITCHOVER OF ALL CRITICAL SYSTEM CONNECTIONS.

NAPA COUNTY CALIFORNIA

A Tradition of Stewardship
A Commitment to Service

MK2 ENGINEERS

Green Valley Executive Center
5030 Business Center Drive,
Suite 150
Fairfield, CA 94534
(707) 759-5260
www.mk2eng.com

REGISTERED PROFESSIONAL ENGINEER
M. MIKE KIANI
M-020804
12-31-20
MECHANICAL
STATE OF CALIFORNIA

THE DRAWINGS, PLANS, SPECIFICATIONS, ELECTRONIC DATABASE AND OTHER INSTRUMENTS OF PROFESSIONAL SERVICE PREPARED BY OR ON BEHALF OF CONSULTANT SHALL BECOME THE PROPERTY OF THE OWNER UPON PAYMENT FOR SUCH WORK. THESE DRAWINGS HAVE BEEN PREPARED SPECIFICALLY FOR THIS PROJECT AND SHALL NOT BE USED FOR ANY OTHER PROJECT. BY ANY OTHER ENTITY OR IN ANY OTHER LOCATION.

811 Know what's below. Call before you dig.

CALL 811 TWO FULL BUSINESS DAYS, MAXIMUM 14 CALENDAR DAYS, BEFORE DIGGING.

No.:	Revision:	Date:
	650 IMPERIAL WAY BID SET	2020-09-24

NAPA COUNTY
PUBLIC WORKS

PROJECT:
650 IMPERIAL WAY - HVAC SYSTEM UPGRADE
PROJECT PW 18-03

650 IMPERIAL WAY
NAPA, CA 94559

SHEET CONTENTS:
ABBREVIATIONS, LEGENDS AND NOTES

PLUMBING
BID SET

PROJECT DATE:	2020/02/05
SCALE:	AS NOTED
SHEET ISSUED DATE:	2020/09/24
APPROVED BY:	MK
DESIGN BY:	MK/SC
DRAWN BY:	DC/JH/AJ
CHECKED BY:	MK/SC
PROJECT NO.:	PW 18-03 / 20003.00

SHEET NO.:
P0.01

650 IMPERIAL WAY HVAC SYSTEM UPGRADE PW 18-03 BID SET - 2020/09/24

P:\2020\20003 - 650 IMPERIAL WAY - HVAC\DRAW\MK2-FILES\20003 - P0-01.DWG - PLOTTED BY DAVID COLEMAN

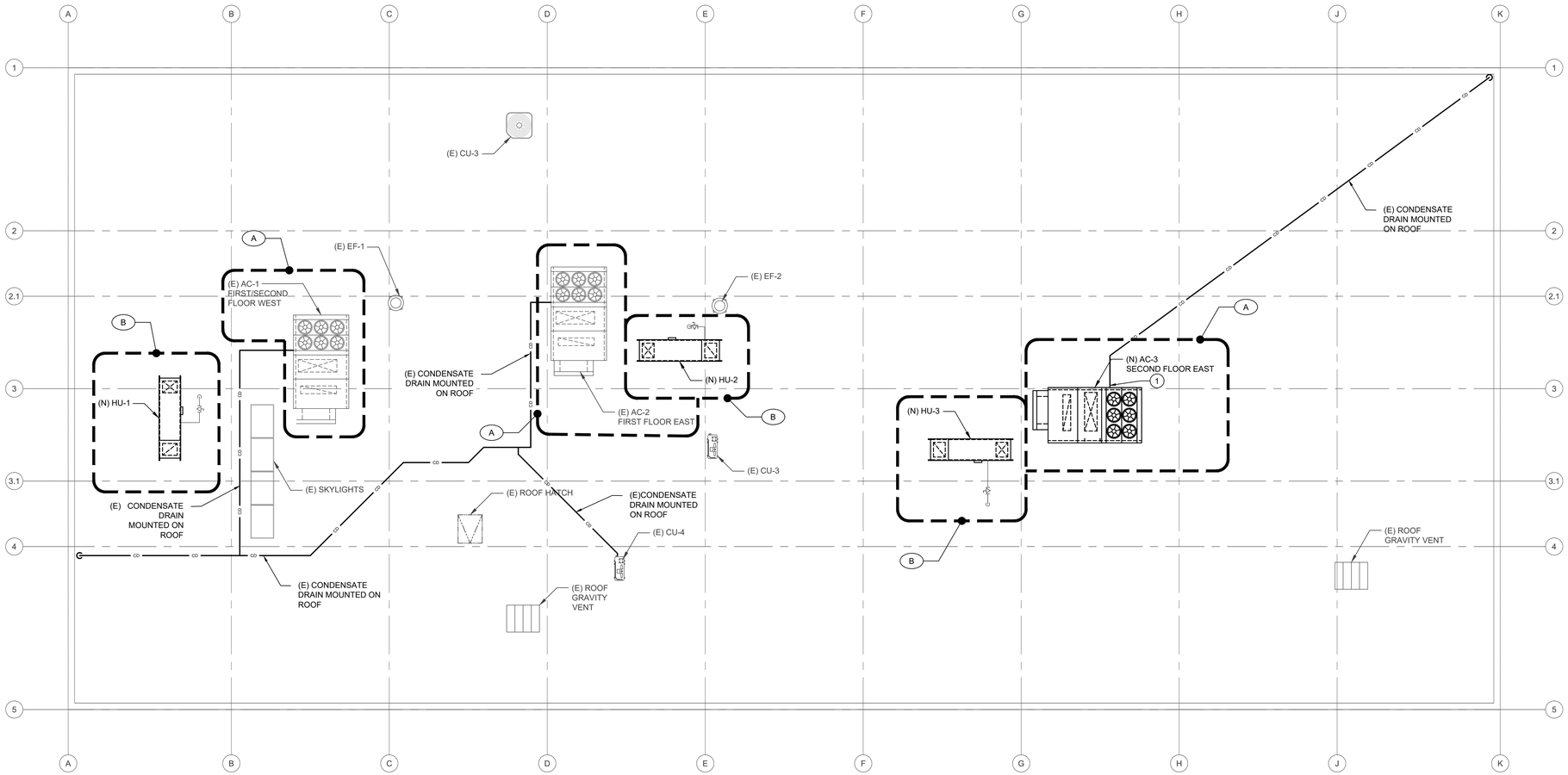

ROOF PLAN - WASTE - PLUMBING (1 / P2.03)

SCALE: 1/8" = 1'-0"

SHEET NOTES:

1. DISCONNECT (E) CONDENSATE FROM AC-3 AND RECONNECT TO (N) AC-3.

BID PACKAGE NOTES:

A. BASE BID:
- UPGRADE OF HVAC SYSTEMS SERVING FIRST AND SECOND FLOORS EAST SIDE, INCLUDES THE FOLLOWING EQUIPMENT & THE ASSOCIATED CONTROLS, DUCTWORK, PIPING, SUPPORTS, & ACCESSORIES:

- *DEMOLITION* - (E) AC-3, (E) VAV 1-6, (E) VAV 1-8, (E) VAV 1-10, (E) VAV 1-11, (E) VAV 2-11, (E) VAV 2-12, (E) VAV 2-13, & (E) VAV 2-17
- *ROOF* - AC-3
- *FIRST AND SECOND FLOORS* - VAV 1-6, VAV 1-8, VAV 1-10, VAV 1-11, VAV 2-11, VAV 2-12, VAV 2-13, & VAV 2-17

B. BID ALTERNATE 1:
- REPLACEMENT "IN-KIND" OF EXISTING ROOFTOP HEATING UNITS, INCLUDES THE FOLLOWING EQUIPMENT & THE ASSOCIATED CONTROLS, DUCTWORK, PIPING, SUPPORTS, & ACCESSORIES:

- *DEMOLITION* - (E) HU-1, (E) HU-2, & (E) HU-3
- *ROOF* - HU-1, HU-2, & HU-3

N

GRAPHIC SCALE
8' 0 8' 16'

A Tradition of Stewardship
A Commitment to Service

MK2 ENGINEERS

Green Valley Executive Center
5030 Business Center Drive,
Suite 150
Fairfield, CA 94534
(707) 759-5260
www.mk2eng.com

REGISTERED PROFESSIONAL ENGINEER
M. MIKE KANI
M020804
12-31-20
MECHANICAL
STATE OF CALIFORNIA

THE DRAWINGS, PLANS, SPECIFICATIONS, ELECTRONIC DATABASE AND OTHER INSTRUMENTS OF PROFESSIONAL SERVICE PREPARED BY OR ON BEHALF OF CONSULTANT SHALL BECOME THE PROPERTY OF THE OWNER UPON PAYMENT FOR SUCH WORK. THESE DRAWINGS HAVE BEEN PREPARED SPECIFICALLY FOR THIS PROJECT AND SHALL NOT BE USED FOR ANY OTHER PROJECT, BY ANY OTHER ENTITY OR IN ANY OTHER LOCATION.

811 Know what's below. Call before you dig.

CALL 811 TWO FULL BUSINESS DAYS, MAXIMUM 14 CALENDAR DAYS, BEFORE DIGGING.

No.:	Revision:	Date:
	650 IMPERIAL WAY BID SET	2020-09-24

NAPA COUNTY
PUBLIC WORKS

PROJECT:
650 IMPERIAL WAY - HVAC SYSTEM UPGRADE
PROJECT PW 18-03

650 IMPERIAL WAY
NAPA, CA 94559

650 IMPERIAL WAY HVAC SYSTEM UPGRADE PW 18-03 BID SET - 2020/09/24

SHEET CONTENTS:

ROOF PLAN

WASTE
PLUMBING
BID SET

PROJECT DATE:	2020/02/05
SCALE:	AS NOTED
SHEET ISSUED DATE:	2020/09/24
APPROVED BY:	MK
DESIGN BY:	MK/SC
DRAWN BY:	DC/JH/AJ
CHECKED BY:	MK/SC
PROJECT NO.:	PW 18-03 / 20003.00

SHEET NO.:

P2.03

P:\2020\20003 - 650 IMPERIAL WAY - HVAC\DRAW\MK2-FILES\20003 - P2-03.DWG - PLOTTED BY DAVID COLEMAN

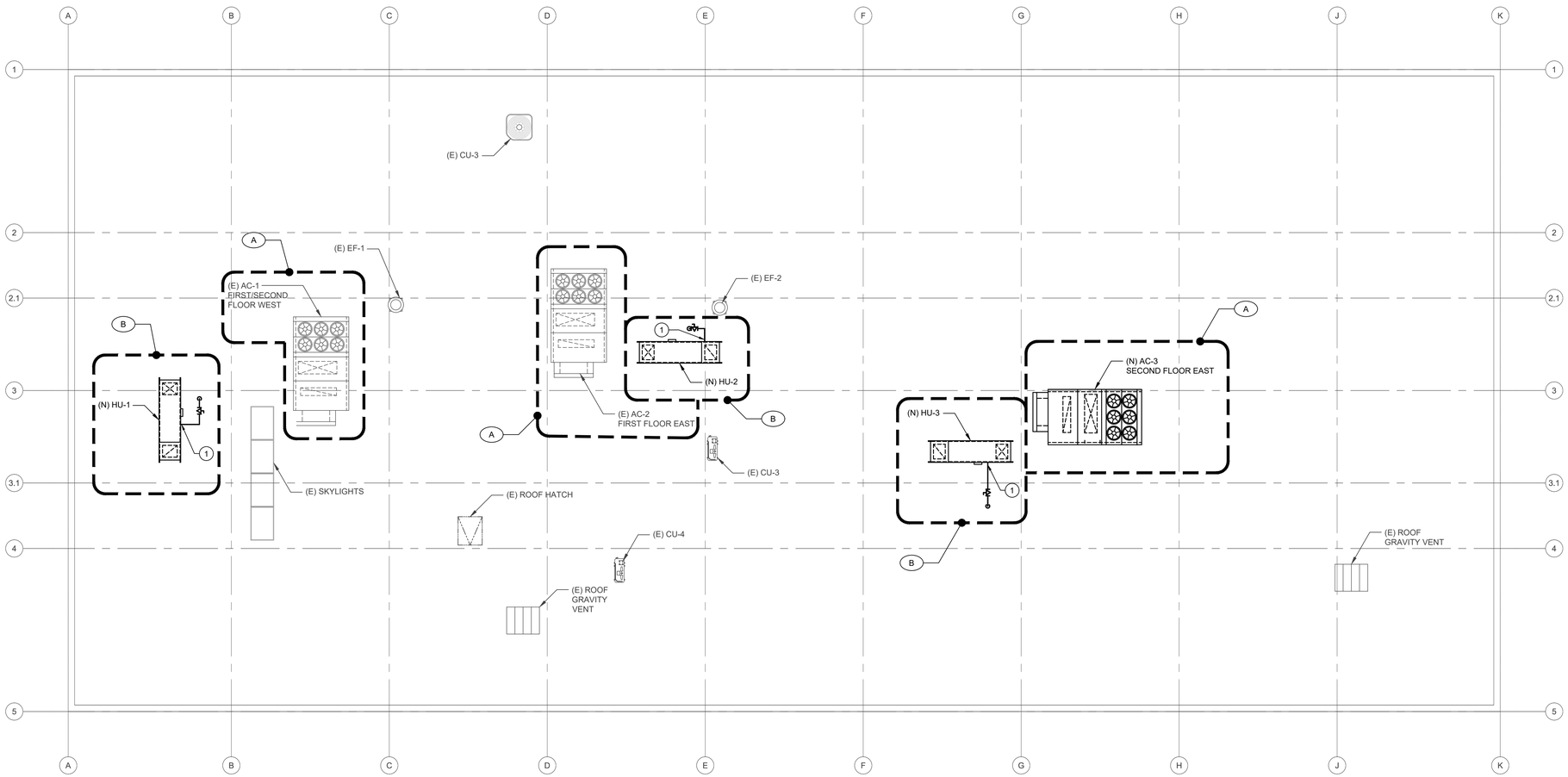

ROOF PLAN - GAS - PLUMBING (1 / P3.03)

SCALE: 1/8" = 1'-0"

N

GRAPHIC SCALE
8' 0 8' 16'

SHEET NOTES:

1. DISCONNECT (E) GAS FROM (E) HU-1, 2, 3 AND RECONNECT TO (N) HU-1, 2, 3.

BID PACKAGE NOTES:

A. BASE BID:
- UPGRADE OF HVAC SYSTEMS SERVING FIRST AND SECOND FLOORS EAST SIDE, INCLUDES THE FOLLOWING EQUIPMENT & THE ASSOCIATED CONTROLS, DUCTWORK, PIPING, SUPPORTS, & ACCESSORIES:

- *DEMOLITION* - (E) AC-3, (E) VAV 1-6, (E) VAV 1-8, (E) VAV 1-10, (E) VAV 1-11, (E) VAV 2-11, (E) VAV 2-12, (E) VAV 2-13, & (E) VAV 2-17
- *ROOF* - AC-3
- *FIRST AND SECOND FLOORS* - VAV 1-6, VAV 1-8, VAV 1-10, VAV 1-11, VAV 2-11, VAV 2-12, VAV 2-13, & VAV 2-17

B. BID ALTERNATE 1:
- REPLACEMENT "IN-KIND" OF EXISTING ROOFTOP HEATING UNITS, INCLUDES THE FOLLOWING EQUIPMENT & THE ASSOCIATED CONTROLS, DUCTWORK, PIPING, SUPPORTS, & ACCESSORIES:

- *DEMOLITION* - (E) HU-1, (E) HU-2, & (E) HU-3
- *ROOF* - HU-1, HU-2, & HU-3

NAPA COUNTY CALIFORNIA

A Tradition of Stewardship
A Commitment to Service

MK2 ENGINEERS

Green Valley Executive Center
5030 Business Center Drive,
Suite 150
Fairfield, CA 94534
(707) 759-5260
www.mk2eng.com

REGISTERED PROFESSIONAL ENGINEER
M. MIKE KANI
M020804
12-31-20
MECHANICAL
STATE OF CALIFORNIA

THE DRAWINGS, PLANS, SPECIFICATIONS, ELECTRONIC DATABASE AND OTHER INSTRUMENTS OF PROFESSIONAL SERVICE PREPARED BY OR ON BEHALF OF CONSULTANT SHALL BECOME THE PROPERTY OF THE OWNER UPON PAYMENT FOR SUCH WORK. THESE DRAWINGS HAVE BEEN PREPARED SPECIFICALLY FOR THIS PROJECT AND SHALL NOT BE USED FOR ANY OTHER PROJECT, BY ANY OTHER ENTITY OR IN ANY OTHER LOCATION.

811 Know what's below. Call before you dig.

CALL 811 TWO FULL BUSINESS DAYS, MAXIMUM 14 CALENDAR DAYS, BEFORE DIGGING.

No.:	Revision:	Date:
	650 IMPERIAL WAY BID SET	2020-09-24

NAPA COUNTY
PUBLIC WORKS

PROJECT:
650 IMPERIAL WAY - HVAC SYSTEM UPGRADE
PROJECT PW 18-03

650 IMPERIAL WAY
NAPA, CA 94559

SHEET CONTENTS:

ROOF PLAN

GAS
PLUMBING
BID SET

PROJECT DATE:	2020/02/05
SCALE:	AS NOTED
SHEET ISSUED DATE:	2020/09/24
APPROVED BY:	MK
DESIGN BY:	MK/SC
DRAWN BY:	DC/JH/AJ
CHECKED BY:	MK/SC
PROJECT NO.:	PW 18-03 / 20003.00

SHEET NO.:

P3.03

650 IMPERIAL WAY HVAC SYSTEM UPGRADE PW 18-03 BID SET - 2020/09/24

P:\2020\20003 - 650 IMPERIAL WAY - HVAC\DRAW\MK2-FILES\20003 - P3-03.DWG - PLOTTED BY DAVID COLEMAN

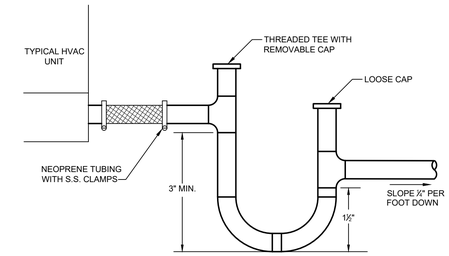

CONDENSATE TRAP DETAIL 1 — NOT TO SCALE — P7.01

CONDENSATE PIPING SUPPORT TABLE	
PIPE DIAMETER	SUPPORT SPACING
ALL SIZES	4'
EXPANSION	10'

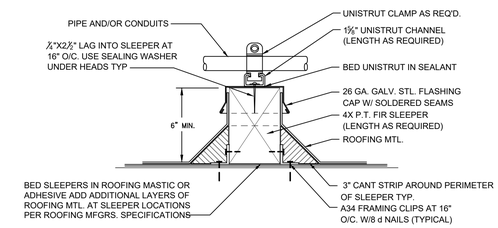

TYPICAL SLEEPER 2 — NOT TO SCALE — P7.01

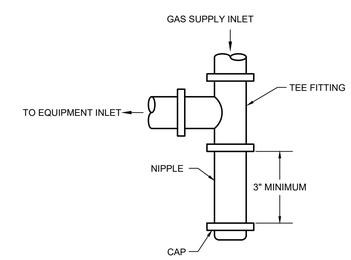

GAS PIPING SEDIMENT TRAP 3 — NOT TO SCALE — P7.01

- 13 — NOT TO SCALE — P7.01
- 9 — NOT TO SCALE — P7.01
- 5 — NOT TO SCALE — P7.01
- 14 — NOT TO SCALE — P7.01
- 10 — NOT TO SCALE — P7.01
- 6 — NOT TO SCALE — P7.01
- 15 — NOT TO SCALE — P7.01
- 11 — NOT TO SCALE — P7.01
- 7 — NOT TO SCALE — P7.01
- 16 — NOT TO SCALE — P7.01
- 12 — NOT TO SCALE — P7.01
- 8 — NOT TO SCALE — P7.01
- 4 — NOT TO SCALE — P7.01

NAPA COUNTY CALIFORNIA

A Tradition of Stewardship
A Commitment to Service

MK2 ENGINEERS

Green Valley Executive Center
5030 Business Center Drive,
Suite 150
Fairfield, CA 94534
(707) 759-5260
www.mk2eng.com

REGISTERED PROFESSIONAL ENGINEER — M. MIKE KANI — 020804 — 12-31-20 — MECHANICAL — STATE OF CALIFORNIA

THE DRAWINGS, PLANS, SPECIFICATIONS, ELECTRONIC DATABASE AND OTHER INSTRUMENTS OF PROFESSIONAL SERVICE PREPARED BY OR ON BEHALF OF CONSULTANT SHALL BECOME THE PROPERTY OF THE OWNER UPON PAYMENT FOR SUCH WORK. THESE DRAWINGS HAVE BEEN PREPARED SPECIFICALLY FOR THIS PROJECT AND SHALL NOT BE USED FOR ANY OTHER PROJECT, BY ANY OTHER ENTITY OR IN ANY OTHER LOCATION.

811 Know what's below. Call before you dig.

CALL 811 TWO FULL BUSINESS DAYS, MAXIMUM 14 CALENDAR DAYS, BEFORE DIGGING.

No.:	Revision:	Date:
	650 IMPERIAL WAY BID SET	2020-09-24

NAPA COUNTY PUBLIC WORKS

PROJECT:
650 IMPERIAL WAY - HVAC SYSTEM UPGRADE
PROJECT PW 18-03

650 IMPERIAL WAY
NAPA, CA 94559

650 IMPERIAL WAY HVAC SYSTEM UPGRADE PW 18-03 BID SET - 2020/09/24

SHEET CONTENTS:

DETAILS

PLUMBING
BID SET

PROJECT DATE:	2020/02/05
SCALE:	AS NOTED
SHEET ISSUED DATE:	2020/09/24
APPROVED BY:	MK
DESIGN BY:	MK/SC
DRAWN BY:	DC/JH/AJ
CHECKED BY:	MK/SC
PROJECT NO.:	PW 18-03 / 20003.00

SHEET NO.:

P7.01

P:\2020\20003 – 650 IMPERIAL WAY – HVAC\DRAW\MK2-FILES\20003 – P7-01.DWG – PLOTTED BY DAVID COLEMAN

ELECTRICAL ABBREVIATIONS

A/AMP	AMPERE	FLA	FULL LOAD AMPERE
AC	ALTERNATING CURRENT	FLEX	FLEXIBLE
AIC	AMPERE INTERRUPTING CAPACITY	FT	FOOT/FEET
AFF	ABOVE FINISHED FLOOR	GEN	GENERATOR
AM	AMMETER	GFI	GROUND FAULT INTERRUPTER
APPROX	APPROXIMATELY	G/GND	GROUND
ARCH	ARCHITECTURE/ARCHITECTURAL	HT/HGT	HEIGHT
ATS	AUTOMATIC TRANSFER SWITCH	HID	HIGH INTENSITY DISCHARGE
AUTO	AUTOMATIC	HP	HORSEPOWER
AUX	AUXILIARY	HTR	HEATER
AWG	AMERICAN WIRE GAUGE	HV	HIGH VOLTAGE
BCW	BARE COPPER WIRE	HVAC	HEATING VENTILATION & AIR CONDITIONING
BKR	BREAKER	HZ	HERTZ
C	CONDUIT	IMP	IMPEDANCE
CAB	CABINET	IN	INCHES
CAT	CATALOG	JB	JUNCTION BOX
CB	CIRCUIT BREAKER	KV	KILOVOLT
CEC	CALIFORNIA ELECTRIC CODE	KVA	KILOVOLT-AMPERE
CLG	CEILING	KW	KILOWATT
CKT	CIRCUIT	LCP	LIGHTING CONTROL PANEL
CONN	CONNECTED/CONNECTION	LF	LINEAR FOOT
CONT	CONTINUATION	LTG	LIGHTING
CT	CURRENT TRANSFORMER	LV	LOW VOLTAGE
db	DECIBEL	ID	INSIDE DIAMETER
DC	DIRECT CURRENT	IN	INCHES
DET	DETAIL	LBS	POUNDS
DIA	DIAMETER	MAX	MAXIMUM
DIAG	DIAGRAM	MCA	MINIMUM CIRCUIT AMPS
DIM	DIMENSION	MECH	MECHANICAL
DISC	DISCONNECT	MFR	MANUFACTURER
DISTR	DISTRIBUTION	MIN	MINIMUM
DWG	DRAWING	(N)	NEW
EA	EACH	NIC	NOT IN CONTRACT
ELECT	ELECTRICAL	NOM	NOMINAL
ELEV	ELEVATOR	PH	ELECTRICAL PHASE
EM/EMERG ENCL	EMERGENCY/EMERGENCY LIGHTING BALLAST	PSI	POUNDS PER SQUARE INCH
ENCL	ENCLOSURE	REQ'S	REQUIREMENTS
EQ	EQUAL	RLA	RUNNING LOAD AMPS
EQPT	EQUIPMENT	STRUCT	STRUCTURAL/STRUCTURE
(E)/EXIST	EXISTING	TYP	TYPICAL
FA	FIRE ALARM	UL	UNDERWRITER'S LABORATORIES
FC	FOOTCANDLE	UON	UNLESS OTHERWISE NOTED
FDR	FEEDER	W/	WITH
FIXT	FIXTURE	WHT	WATER HEATER
FL/FLR	FLOOR	WP	WEATHERPROOF

SINGLE LINE DIAGRAMS

- ELECTRICAL MOTOR CONNECTION
- CIRCUIT BREAKER, RATING AS NOTED
- UTILITY METER AS REQUIRED BY UTILITY
- PANEL "XX" XXXA — BRANCH CIRCUIT PANELBOARD. RATING AND TAG AS NOTED.
- POWER TRANSFORMER. VOLTAGE & RATING AS NOTED. GROUND CONNECTION AS REQUIRED.
- GROUND BUS WITH INSULATORS. SIZE AS REQUIRED.
- GROUND ROD 3/4"Ø x 10' COPPER CLAD

APPLICABLE BUILDING CODES

ALL WORK SHALL COMPLY WITH FOLLOWING CODES AND REGULATIONS

2016 CALIFORNIA ELECTRICAL CODE (CEC)
2011 NATIONAL ELECTRICAL CODE (NFPA 70)
2016 RECOMMENDED PRACTICE FOR ELECTRICAL EQUIPMENT MAINTENANCE (NFPA 70B)
2012 STANDARD FOR ELECTRICAL SAFETY IN THE WORKPLACE (NFPA 70E)
2016 NATIONAL FIRE ALARM AND SIGNALING CODE (NFPA 72)
2012 LIFE SAFETY CODE (NFPA 101)
2012 FIRE CODE (NFPA 1)
2016 ASHRAE STANDARDS
2016 CALIFORNIA BUILDING CODE (CBC)
2016 CALIFORNIA FIRE CODE (CFC)

LEGEND

GENERAL SYMBOLS

- (1) NUMBERED CONSTRUCTION NOTE OR SHEET NOTE.
- ◇1 NUMBERED FIRE ALARM NOTE.
- A. GENERAL SHEET NOTE. APPLIES TO ALL ITEMS ON THE SHEET.
- EQUIPMENT DESIGNATION.
- (A) LIGHTING FIXTURE DESIGNATION.
- DETAIL NUMBER.
- SHEET NUMBER ON WHICH THE DETAIL RESIDES.

SWITCH SYMBOLS

- $ SINGLE POLE TOGGLE SWITCH
- D$ DIMMER SWITCH
- M$ MOTION SENSOR
- $a SWITCHED LAMP GROUP
- $3 3-WAY SWITCH
- OS OCCUPANCY SENSOR
- $T MANUAL MOTOR STARTER WITH THERMAL OVERLOAD

WIREWAYS

- CONDUIT RUN - CONCEALED IN WALL OR CEILING SPACE
- CONDUIT RUN - CONCEALED BENEATH FLOOR SURFACE
- 1,3,5 BRANCH CIRCUIT HOMERUN SINGLE POLE TAG, "1,3,5", (3-1P CB) ETC. MULTIPOLE TAG, "1/3/5", (1-3P CB)
- LCB- BRANCH CIRCUIT HOMERUN.

LIGHTING SYMBOLS

- EXIT SIGN WITH LIGHTED PANEL
- EXIT SIGN W/LIGHTED PANEL BOTH SIDES AND DIRECTIONAL ARROWS
- 8" X 8" RECESS-MOUNTED LED LIGHT FIXTURE
- RECESS-MOUNTED EXTERIOR CEILING LIGHT FIXTURE
- SURFACE LED STRIP LIGHT
- LINEAR RECESS-MOUNTED LED LIGHT FIXTURE
- RECESSED LED DOWNLIGHT FIXTURE
- RECESSED MULTI-HEAD ADJUSTABLE DOWNLIGHT
- LED FOUNTAIN LIGHT
- LED LOW PROFILE UNDER CABINET LIGHT
- WALL MOUNTED LIGHT FIXTURE (EMERGENCY)
- COMBINATION EXIT SIGN & LIGHT FIXTURE (EMERGENCY)

POWER & DEVICES

- 120/208V, PANELBOARD, SURFACE MOUNTED, +72" TO TOP OF PANEL
- 120/208V, PANELBOARD, RECESSED MOUNTED, +72" TO TOP OF PANEL
- 277/480V, PANELBOARD, SURFACE MOUNTED, +72" TO TOP OF PANEL
- 277/480V, PANELBOARD, RECESSED MOUNTED, +72" TO TOP OF PANEL
- EXISTING DUPLEX RECEPTACLE TO REMAIN, UON
- NEW DUPLEX RECEPTACLE, MOUNTED AT +18" A.F.F. (U.O.N.). NEMA 5-20R (120V-20A+G)
- DUPLEX RECEPTACLE W/ GROUND FAULT CIRCUIT INTERRUPTER (GFCI), MOUNTED AT +18" A.F.F. (U.O.N.). NEMA 5-20R (120V-20A+G)
- DUPLEX RECEPTACLE, MOUNTED AT +9" ABOVE COUNTERTOP (U.O.N.). NEMA 5-20R (120V-20A+G)
- DUPLEX GFCI RECEPTACLE, MOUNTED AT 9" ABOVE COUNTERTOP (U.O.N.). NEMA 5-20R (120V-20A+G)
- DUPLEX RECEPTACLE, FLUSH FLOOR MOUNT. NEMA 5-20R (120V-20A+G)
- JUNCTION BOX MOUNTED ABOVE ACCESSIBLE CEILING OR IN FLOOR
- JUNCTION BOX, RECESSED WALL MOUNTED
- NON-FUSED DISCONNECT SWITCH. SIZE AS NOTED OR REQUIRED BY APPLICATION.
- POWER CORD OUTLET
- NEW 277V TWIST-LOCK RECEPTACLE HUNG FROM THE CEILING FOR GROW-LIGHT FIXTURES (NEMA L7-20).

SHEET INDEX

E0.01	ABBREVIATIONS, LEGENDS, & NOTES - ELECTRICAL
E3.01	FIRST FLOOR PLAN - ELECTRICAL - POWER
E3.02	SECOND FLOOR PLAN - ELECTRICAL - POWER
E3.03	ROOF PLAN - ELECTRICAL - POWER
E5.01	SINGLE LINE DIAGRAM AND SCHEDULES - ELECTRICAL
E7.01	DETAILS - ELECTRICAL

GENERAL NOTES

1. ALL WORK SHALL BE PERFORMED BY A LICENSED CONTRACTOR THAT WILL INSTALL SYSTEMS, EQUIPMENT AND COMPONENTS IN ACCORDANCE WITH MINIMUM REQUIREMENTS SHOWN IN THESE PLANS. THE CONTRACT DOCUMENTS ESTABLISH SCOPE, MATERIALS AND QUALITY BUT ARE NOT DETAILED INSTALLATION INSTRUCTIONS. DRAWINGS ARE DIAGRAMMATIC. COORDINATE WORK WITH RELATED TRADES AND FURNISH, IN WRITING, ANY INFORMATION NECESSARY TO PERMIT THE WORK OF RELATED TRADES TO BE INSTALLED SATISFACTORILY AND WITH THE LEAST POSSIBLE CONFLICT OR DELAY. THE ELECTRICAL DRAWINGS SHOW THE GENERAL ARRANGEMENT OF EQUIPMENT AND APPURTENANCES. ANY DEVIATION FROM THE DESIGN PLANS SHALL ONLY BE PERFORMED IF APPROVED BY THE OWNER'S REPRESENTATIVE OR THE DESIGN ENGINEER. ALL WORK SHALL MEET OR EXCEED THE MINIMUM REQUIREMENTS OF THE LATEST NATIONAL ELECTRIC CODE, NEC, WITH STATE OF CALIFORNIA AMENDMENTS, CEC.
2. CONTRACTOR SHALL OBTAIN AND PAY FOR ALL FEES AND PERMITS REQUIRED TO COMPLETE WORK.
3. CONTRACTOR SHALL COORDINATE INCOMING UTILITY SERVICES WITH LOCAL POWER COMPANY, TELEPHONE COMPANY, AND OTHER TRADES.
4. THE ELECTRICAL DRAWINGS GENERALLY DO NOT INDICATE THE NUMBER OF WIRES IN CONDUIT FOR THE BRANCH CIRCUIT WIRING OF FIXTURES AND OUTLETS, OR THE ACTUAL CIRCUITING. PROVIDE THE CORRECT WIRE SIZE AND QUANTITY AS REQUIRED BY THE INDICATED CIRCUITING AND/OR CIRCUIT NUMBERS INDICATED, THE CONTROL INTENT, REFERENCED WIRING DIAGRAM (IF ANY), THE SPECIFIED VOLTAGE DROP OR MAXIMUM DISTANCE LIMITATIONS, AND THE APPLICABLE REQUIREMENTS OF THE CEC.
5. CONDUIT SHALL BE CONCEALED IN CEILING, WALLS, AND UNDERGROUND EXCEPT WHERE SPECIFICALLY NOTED ON DRAWINGS. PROVIDE NYLON PULL ROPE IN ALL EMPTY CONDUITS.
6. UNDERGROUND CONDUITS SHALL BE PVC SCHEDULE 40. CONDUITS WITHIN BUILDING SHALL BE ELECTRICAL METALLIC TUBING (EMT). EXPOSED EXTERIOR SHALL BE RIGID GALVANIZED STEEL (RGS). ALL WIRING SHALL BE IN CONDUIT, UNLESS OTHERWISE NOTED.
7. ALL JUNCTION BOXES SHALL BE MINIMUM 4"X4", CONTRACTOR SHALL PROVIDE THE CORRECT JUNCTION BOXES ACCORDING TO THE CEC BOX FILL CALCULATIONS & TABLES.
8. IN THE EVENT OF A CONFLICT OR INCONSISTENCY BETWEEN ITEMS INDICATED ON THE PLANS AND/OR SPECIFICATION OR WITH CODE REQUIREMENTS, THE NOTE, SPECIFICATION OR CODE WHICH PRESCRIBES AND ESTABLISHES THE MORE COMPLETE JOB OR THE HIGHER STANDARD SHALL PREVAIL.
9. OMISSION FROM THE DRAWINGS OR SPECIFICATIONS OR THE MIS-DESCRIPTION OF DETAILS OF WORK WHICH ARE MANIFESTLY NECESSARY TO CARRY OUT THE INTENT OF THE DRAWINGS AND SPECIFICATIONS, OR WHICH ARE CUSTOMARILY PERFORMED, SHALL NOT RELIEVE THE CONTRACTOR FROM PERFORMING SUCH OMITTED OR MIS-DESCRIBED DETAILS OF THE WORK BUT THEY SHALL BE PERFORMED AS IF FULLY AND CORRECTLY SET FORTH AND DESCRIBED IN THE DRAWINGS AND SPECIFICATIONS.
10. THE CONTRACTOR SHALL CHECK ALL DRAWINGS UPON RECEIPT, SHALL PROMPTLY NOTIFY THE OWNER OF ANY DISCREPANCIES. FIGURES MARKED ON DRAWINGS SHALL IN GENERAL BE FOLLOWED IN PREFERENCE TO SCALE MEASUREMENTS. LARGE SCALE DRAWINGS SHALL GOVERN SMALL SCALE DRAWINGS. THE CONTRACTOR SHALL COMPARE ALL DRAWINGS AND VERIFY THE FIGURES BEFORE LAYING OUT THE WORK AND WILL BE RESPONSIBLE FOR ANY ERRORS WHICH MIGHT HAVE BEEN AVOIDED THEREBY.
11. ALL MATERIALS AND EQUIPMENT SHALL BE NEW AND SHALL BE INSTALLED IN THE MANNER FOR WHICH THEY ARE DESIGNED AND APPROVED, PER LISTING (UL) OR LABELING , IN ACCORDANCE TO CEC ART.110.3. U.O.N.
12. UNLESS NOTED OTHERWISE, ALL WIRE SHALL BE STRANDED COPPER. ALL WIRE SHALL BE UL LISTED, RATED FOR 600 VOLTS TYPE THHN/THWN INSULATION NO 12 MINIMUM SIZE EXCEPT FOR CONTROLS. ALL CONTROLS WIRE SHALL BE NO. 14 MINIMUM SIZE, UNLESS OTHERWISE NOTED.
13. THE CONTRACTOR SHALL INSTALL ALL CONDUITS AND WIRES WITH A MINIMUM NUMBER OF BENDS AND IN SUCH MANNER AS TO CONFORM TO THE STRUCTURE. AVOID OBSTRUCTIONS, PRESERVE HEAD ROOM, KEEP OPENINGS AND PASSAGEWAYS CLEAR AND MEET ALL STRUCTURAL CODE REQUIREMENTS.
14. THE CONTRACTOR SHALL PROVIDE SUPPORT FOR ALL FIXTURES AND ELECTRICAL EQUIPMENT TO COMPLY WITH THE SEISMIC REQUIREMENTS OF THE CALIFORNIA BUILDING CODE AND ALL LOCAL ORDINANCES.
15. THE ENTIRE ELECTRICAL INSTALLATION SHALL BE GROUNDED AS REQUIRED BY ALL APPLICABLE CODES AND THE SERVING UTILITY.
16. ALL CONTINUITY, WIRING INSULATION AND GROUNDING RESISTANCE TESTS SHALL BE PER NETA REQUIREMENTS.
17. COORDINATE ALL ELECTRICAL PENETRATIONS THROUGH ROOF, WALLS, AND FLOORS WITH GENERAL CONTRACTOR. PATCH, SEAL, AND/OR PAINT AS REQUIRED TO COMPLY WITH FIRE CODE OR ARCHITECTURAL FINISHES.
18. ALL ELECTRICAL EQUIPMENT AND CONNECTIONS SHALL BE SECURELY FASTENED TO STRUCTURAL COMPONENTS. ALL ELECTRICAL EQUIPMENT SHALL BE SUITABLE FOR THE ENVIRONMENT OR CONDITION.
19. PROVIDE GROUNDING OF ALL ELECTRICAL EQUIPMENT IN COMPLIANCE WITH ARTICLE #250 OF THE CALIFORNIA ELECTRIC CODE, CEC.
20. THE CONTRACTOR SHALL FURNISH AND INSTALL ALL CONDUITS, WIRES, BOXES, SWITCHES, LIGHT FIXTURES (WITH LAMPS), RECEPTACLES AND SERVICE DEVICES REQUIRED FOR A COMPLETE AND OPERATIONAL ELECTRICAL SYSTEM.
21. VERIFY EXISTING SITE CONDITIONS, SERVICE REQUIREMENTS, AND EXACT LOCATION OF SERVICE FACILITIES BEFORE SUBMITTING BID.
22. PROVIDE TYPEWRITTEN AND DATED DIRECTORY CARD IN ALL PANELS TO IDENTIFY LOAD SERVED BY EACH CIRCUIT BREAKER.
23. FOR PURPOSES OF CLEARNESS AND LEGIBILITY, THE ELECTRICAL DRAWINGS ARE ESSENTIALLY DIAGRAMMATIC, THE SIZE AND LOCATION OF EQUIPMENT IS SHOWN TO SCALE WHEREVER POSSIBLE. THE CONTRACTOR SHALL VERIFY ALL CONDITIONS, DATA INFORMATION AS INDICATED ON THE DRAWINGS AND IN THE SPECIFICATION SECTIONS WHERE ELECTRICAL WORK INTERFACES WITH OTHER TRADES.
24. REMOVE ALL ABANDONED CONDUIT TO NEAREST JUNCTION BOX. REMOVE ALL ABANDONED WIRES BACK TO PANEL BOARD. LABEL CIRCUIT BREAKER AS SPARE.
25. ELECTRICAL CONTRACTOR SHALL COMPLY WITH ALL APPLICABLE CALIFORNIA STATE ACCESSIBILITY LAWS.
26. CONTRACTOR TO LABEL RECEPTACLES, JUNCTION BOXES, DISCONNECT SWITCHES, VFDS, ETC. WITH CORRESPONDING PANEL NAME AND CIRCUIT DESIGNATION.
27. COLOR CODING SHALL BE PER CODE.
28. AT COMPLETION OF WORK, CONTRACTOR SHALL PREPARE AS-BUILT DRAWINGS TO INCORPORATE ALL DEVIATIONS FROM THE PLANS. THESE AS-BUILT DRAWINGS SHALL BE SUBMITTED TO THE OWNER.
29. LIQUID-TIGHT FLEXIBLE NONMETALLIC CONDUITS SHALL BE 6 FEET IN LENGTH MAXIMUM.
30. CONTRACTOR SHALL PROVIDE BARRICADE, SAFETY SIGNS AND OTHER DEVICES TO ISOLATE WORK AREA DURING CONSTRUCTION, UPON UNIVERSITY APPROVAL.
31. CONTRACTOR SHALL REPAIR/PATCH AND WEATHER PROOF ANY OPENING CAUSED BY EQUIPMENT/PIPING INSTALLATION, AND SHALL PAINT WHERE NECESSARY.
32. COORDINATE ANY AND ALL SHUTDOWNS WITH OWNER'S REPRESENTATIVE.

A Tradition of Stewardship
A Commitment to Service

MK2 ENGINEERS

Green Valley Executive Center
5030 Business Center Drive,
Suite 150
Fairfield, CA 94534
(707) 759-5260
www.mk2eng.com

REGISTERED PROFESSIONAL ENGINEER — TOMA P. DORDEA, JR — E 16109 — EXP. 12-31-21 — ELECTRICAL — STATE OF CALIFORNIA

THE DRAWINGS, PLANS, SPECIFICATIONS, ELECTRONIC DATABASE AND OTHER INSTRUMENTS OF PROFESSIONAL SERVICE PREPARED BY OR ON BEHALF OF CONSULTANT SHALL BECOME THE PROPERTY OF THE OWNER UPON PAYMENT FOR SUCH WORK. THESE DRAWINGS HAVE BEEN PREPARED SPECIFICALLY FOR THIS PROJECT AND SHALL NOT BE USED FOR ANY OTHER PROJECT, BY ANY OTHER ENTITY OR IN ANY OTHER LOCATION.

811 Know what's below. Call before you dig. CALL 811 TWO FULL BUSINESS DAYS, MAXIMUM 14 CALENDAR DAYS, BEFORE DIGGING.

No.:	Revision:	Date:
	650 IMPERIAL WAY BID SET	2020-09-24

NAPA COUNTY PUBLIC WORKS

PROJECT:
650 IMPERIAL WAY - HVAC SYSTEM UPGRADE PROJECT PW 18-03

650 IMPERIAL WAY
NAPA, CA 94559

650 IMPERIAL WAY HVAC SYSTEM UPGRADE PW 18-03 BID SET - 2020/09/24

SHEET CONTENTS:
ABBREVIATIONS, LEGENDS AND NOTES

ELECTRICAL
BID SET

PROJECT DATE:	2020/02/05
SCALE:	AS NOTED
SHEET ISSUED DATE:	2020/09/24
APPROVED BY:	TD
DESIGN BY:	TD/KD
DRAWN BY:	DC/KD/AJ
CHECKED BY:	TD/KD
PROJECT NO.:	PW 18-03 / 20003.00

SHEET NO.:
E0.01

P:\2020\20003 - 650 IMPERIAL WAY - HVAC\DRAW\MK2-FILES\20003 - E0-01.DWG - PLOTTED BY DAVID COLEMAN

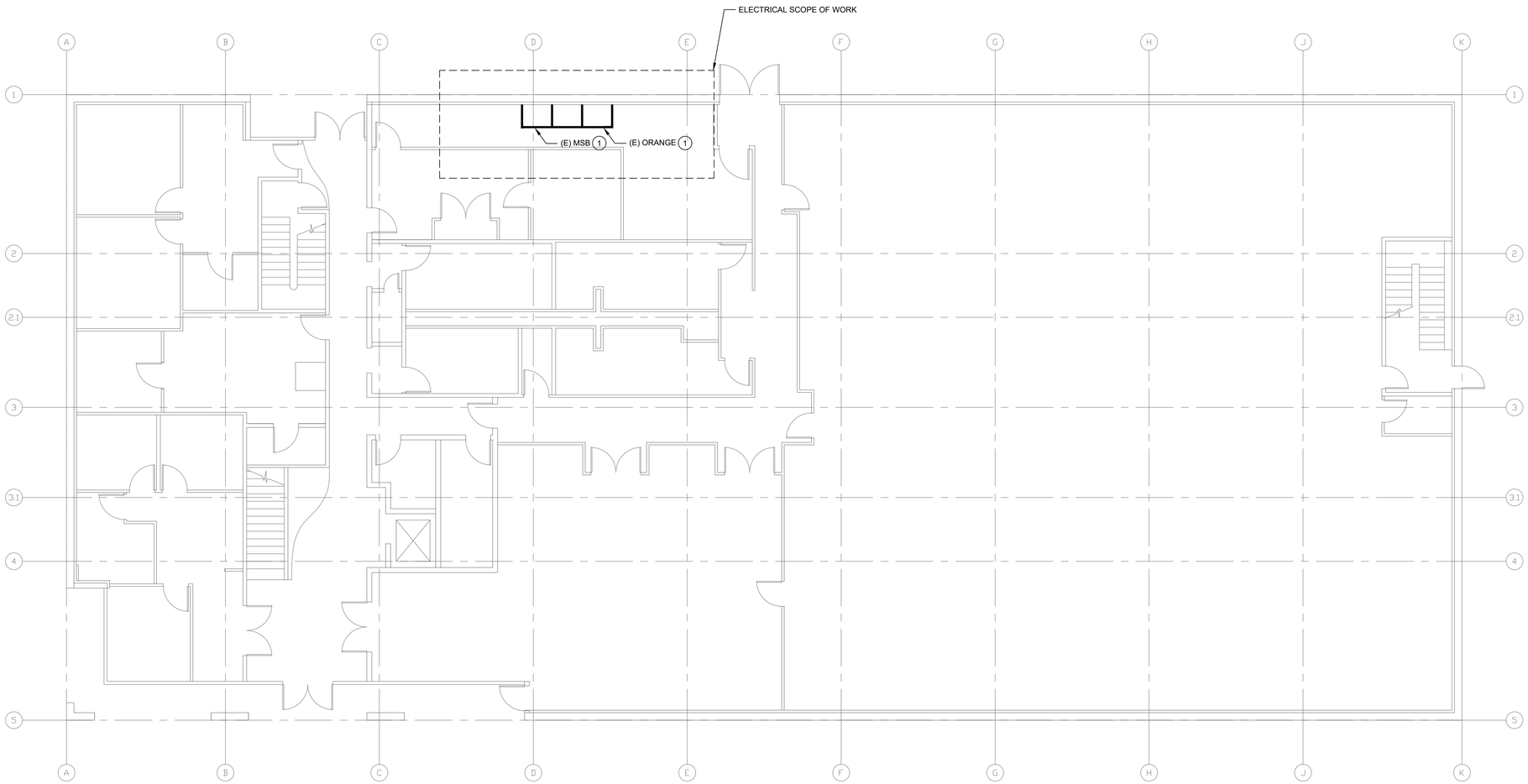

FIRST FLOOR PLAN - ELECTRICAL - POWER (1 / E3.01)

SCALE: 1/8" = 1'-0"

SHEET NOTES:

1. ELECTRICAL EQUIPMENT TO BE MODIFIED. REFER TO PANEL SCHEDULED FOR ADDITIONAL INFORMATION.

N

GRAPHIC SCALE
8' 0 8' 16'

A Tradition of Stewardship
A Commitment to Service

MK2 ENGINEERS

Green Valley Executive Center
5030 Business Center Drive,
Suite 150
Fairfield, CA 94534
(707) 759-5260
www.mk2eng.com

REGISTERED PROFESSIONAL ENGINEER
TOMAS F. DORDAL JR.
E 16189
EXP. 12-31-21
ELECTRICAL
STATE OF CALIFORNIA

THE DRAWINGS, PLANS, SPECIFICATIONS, ELECTRONIC DATABASE AND OTHER INSTRUMENTS OF PROFESSIONAL SERVICE PREPARED BY OR ON BEHALF OF CONSULTANT SHALL BECOME THE PROPERTY OF THE OWNER UPON PAYMENT FOR SUCH WORK. THESE DRAWINGS HAVE BEEN PREPARED SPECIFICALLY FOR THIS PROJECT AND SHALL NOT BE USED FOR ANY OTHER PROJECT, BY ANY OTHER ENTITY OR IN ANY OTHER LOCATION.

811 Know what's below. Call before you dig.

CALL 811 TWO FULL BUSINESS DAYS, MAXIMUM 14 CALENDAR DAYS, BEFORE DIGGING.

No.:	Revision:	Date:
	650 IMPERIAL WAY BID SET	2020-09-24

NAPA COUNTY
PUBLIC WORKS

PROJECT:
650 IMPERIAL WAY - HVAC SYSTEM UPGRADE
PROJECT PW 18-03

650 IMPERIAL WAY
NAPA, CA 94559

SHEET CONTENTS:

FIRST LEVEL
FLOOR PLAN
POWER
ELECTRICAL

BID SET

PROJECT DATE:	2020/02/05
SCALE:	AS NOTED
SHEET ISSUED DATE:	2020/09/24
APPROVED BY:	TD
DESIGN BY:	TD/KD
DRAWN BY:	DC/KD/AJ
CHECKED BY:	TD/KD
PROJECT NO.:	PW 18-03 / 20003.00

SHEET NO.:

E3.01

650 IMPERIAL WAY HVAC SYSTEM UPGRADE PW 18-03 BID SET - 2020/09/24

P:\2020\20003 - 650 IMPERIAL WAY - HVAC\DRAW\MK2-FILES\20003 - E3-01.DWG - PLOTTED BY DAVID COLEMAN

SECOND FLOOR PLAN - ELECTRICAL - POWER (1 / E3.02)

SCALE: 1/8" = 1'-0"

N

GRAPHIC SCALE
8' 0 8' 16'

SHEET NOTES:

1. ELECTRICAL EQUIPMENT TO BE MODIFIED. REFER TO PANEL SCHEDULED FOR ADDITIONAL INFORMATION.

A Tradition of Stewardship
A Commitment to Service

MK2 ENGINEERS

Green Valley Executive Center
5030 Business Center Drive,
Suite 150
Fairfield, CA 94534
(707) 759-5260
www.mk2eng.com

REGISTERED PROFESSIONAL ENGINEER
TOMAS F. DORDCAI
E 16189
EXP. 12-31-21
ELECTRICAL
STATE OF CALIFORNIA

THE DRAWINGS, PLANS, SPECIFICATIONS, ELECTRONIC DATABASE AND OTHER INSTRUMENTS OF PROFESSIONAL SERVICE PREPARED BY OR ON BEHALF OF CONSULTANT SHALL BECOME THE PROPERTY OF THE OWNER UPON PAYMENT FOR SUCH WORK. THESE DRAWINGS HAVE BEEN PREPARED SPECIFICALLY FOR THIS PROJECT AND SHALL NOT BE USED FOR ANY OTHER PROJECT, BY ANY OTHER ENTITY OR IN ANY OTHER LOCATION.

811 Know what's below. Call before you dig.

CALL 811 TWO FULL BUSINESS DAYS, MAXIMUM 14 CALENDAR DAYS, BEFORE DIGGING.

No.:	Revision:	Date:
	650 IMPERIAL WAY BID SET	2020-09-24

NAPA COUNTY
PUBLIC WORKS

PROJECT:
650 IMPERIAL WAY - HVAC SYSTEM UPGRADE
PROJECT PW 18-03

650 IMPERIAL WAY
NAPA, CA 94559

650 IMPERIAL WAY HVAC SYSTEM UPGRADE PW 18-03 BID SET - 2020/09/24

SHEET CONTENTS:

SECOND LEVEL
FLOOR PLAN
POWER
ELECTRICAL

BID SET

PROJECT DATE:	2020/02/05
SCALE:	AS NOTED
SHEET ISSUED DATE:	2020/09/24
APPROVED BY:	TD
DESIGN BY:	TD/KD
DRAWN BY:	DC/KD/AJ
CHECKED BY:	TD/KD
PROJECT NO.:	PW 18-03 / 20003.00

SHEET NO.:

E3.02

P:\2020\20003 - 650 IMPERIAL WAY - HVAC\DRAW\MK2-FILES\20003 - E3-02.DWG - PLOTTED BY DAVID COLEMAN

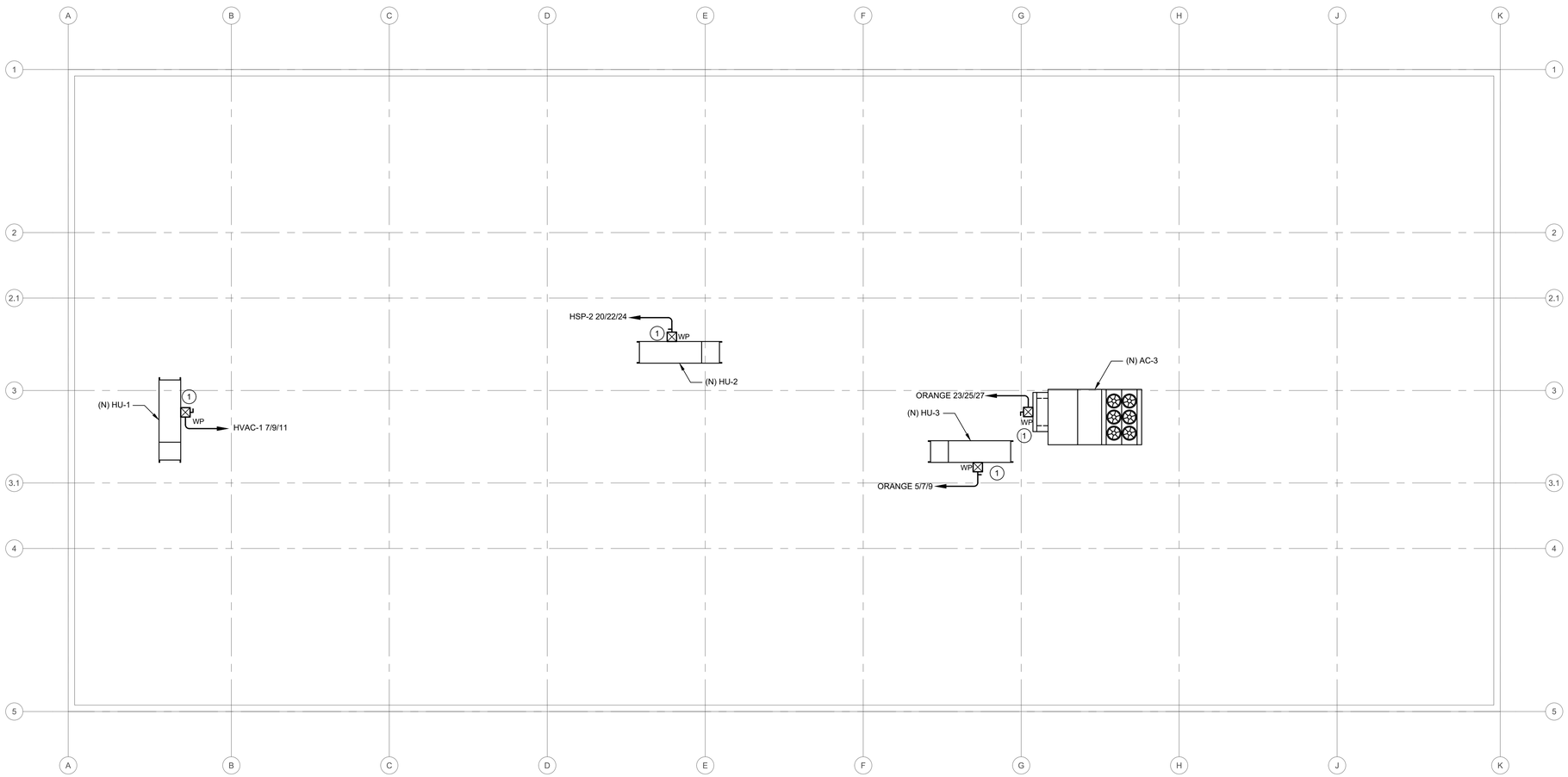

ROOF PLAN - ELECTRICAL - POWER (1 / E3.03)

SCALE: 1/8" = 1'-0"

GENERAL NOTES:

A. EQUIPMENT LOCATIONS SHOWN ON DRAWING SHALL BE COORDINATED WITH MECHANICAL DRAWINGS. IN CASE OF DISCREPANCIES THE LOCATIONS SHOWN ON MECHANICAL PLANS SHALL PREVAIL.

SHEET NOTES:

1. INTERCEPT AND EXTEND CONDUIT AND WIRES TO NEW EQUIPMENT LOCATION.

BID PACKAGE NOTES:

A. BASE BID:
- UPGRADE OF HVAC SYSTEMS SERVING FIRST AND SECOND FLOORS EAST SIDE, INCLUDES THE FOLLOWING EQUIPMENT & THE ASSOCIATED CONTROLS, DUCTWORK, PIPING, SUPPORTS, & ACCESSORIES:

- *DEMOLITION* - (E) AC-3, (E) VAV 1-6, (E) VAV 1-8, (E) VAV 1-10, (E) VAV 1-11, (E) VAV 2-11, (E) VAV 2-12, (E) VAV 2-13, & (E) VAV 2-17
- *ROOF* - AC-3
- *CONTROLLERS ON ROOF* - AC-1, AC-2, AC-3, HU-1, HU-2, & HU-3
- *FIRST AND SECOND FLOORS* - VAV 1-6, VAV 1-8, VAV 1-10, VAV 1-11, VAV 2-11, VAV 2-12, VAV 2-13, & VAV 2-17
- *FIRST AND SECOND FLOOR THERMOSTATS* - VAV 1-6, VAV 1-8, VAV 1-10, VAV 1-11, VAV 2-11, VAV 2-12, VAV 2-13, & VAV 2-17

B. BID ALTERNATE 1:
- REPLACEMENT "IN-KIND" OF EXISTING ROOFTOP HEATING UNITS, INCLUDES THE FOLLOWING EQUIPMENT & THE ASSOCIATED CONTROLS, DUCTWORK, PIPING, SUPPORTS, & ACCESSORIES:

- *DEMOLITION* - (E) HU-1, (E) HU-2, & (E) HU-3
- *ROOF* - HU-1, HU-2, & HU-3

N

GRAPHIC SCALE
8' 0 8' 16'

A Tradition of Stewardship
A Commitment to Service

MK2 ENGINEERS

Green Valley Executive Center
5030 Business Center Drive,
Suite 150
Fairfield, CA 94534
(707) 759-5260
www.mk2eng.com

REGISTERED PROFESSIONAL ENGINEER
TOMAS F. DORDAL JR.
E 16109
EXP. 12-31-21
ELECTRICAL
STATE OF CALIFORNIA

THE DRAWINGS, PLANS, SPECIFICATIONS, ELECTRONIC DATABASE AND OTHER INSTRUMENTS OF PROFESSIONAL SERVICE PREPARED BY OR ON BEHALF OF CONSULTANT SHALL BECOME THE PROPERTY OF THE OWNER UPON PAYMENT FOR SUCH WORK. THESE DRAWINGS HAVE BEEN PREPARED SPECIFICALLY FOR THIS PROJECT AND SHALL NOT BE USED FOR ANY OTHER PROJECT. BY ANY OTHER ENTITY OR IN ANY OTHER LOCATION.

811 Know what's below. Call before you dig.

CALL 811 TWO FULL BUSINESS DAYS, MAXIMUM 14 CALENDAR DAYS, BEFORE DIGGING.

No.:	Revision:	Date:
	650 IMPERIAL WAY BID SET	2020-09-24

NAPA COUNTY
PUBLIC WORKS

PROJECT:
650 IMPERIAL WAY - HVAC SYSTEM UPGRADE
PROJECT PW 18-03

650 IMPERIAL WAY
NAPA, CA 94559

SHEET CONTENTS:

ROOF PLAN

POWER
ELECTRICAL
BID SET

PROJECT DATE:	2020/02/05
SCALE:	AS NOTED
SHEET ISSUED DATE:	2020/09/24
APPROVED BY:	TD
DESIGN BY:	TD/KD
DRAWN BY:	DC/KD/AJ
CHECKED BY:	TD/KD
PROJECT NO.:	PW 18-03 / 20003.00

SHEET NO.:

E3.03

650 IMPERIAL WAY HVAC SYSTEM UPGRADE PW 18-03 BID SET - 2020/09/24

P:\2020\20003 – 650 IMPERIAL WAY – HVAC\DRAW\MK2-FILES\20003 – E3-03.DWG – PLOTTED BY DAVID COLEMAN

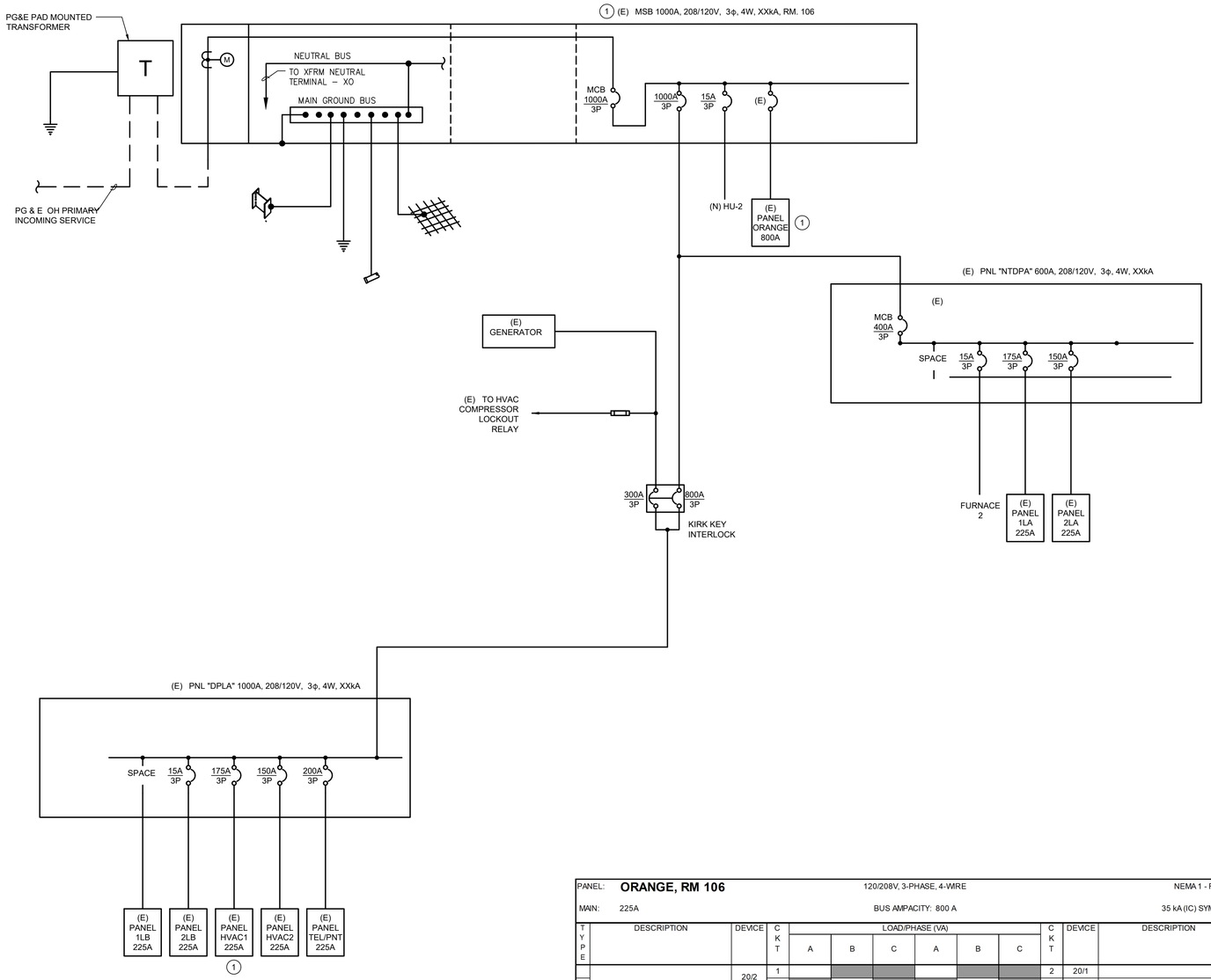

GENERAL NOTES:

A. CONTRACTOR TO TEST ALL (E) ELECTRICAL ITEMS (MAIN SWBD, PANELS, FUSES, C.B., WIRES), ETC. TO MAKE SURE THAT AT THE END OF THE PROJECT, THE OWNER WILL HAVE A RELIABLE AND SAFE SYSTEM.

B. CONTRACTOR SHALL SUBMIT SHOP DRAWINGS TO ELECTRICAL ENGINEER PRIOR TO PURCHASE OF ELECTRICAL EQUIPMENT INDICATING AIC RATINGS THAT EXCEED UTILITY SHORT CIRCUIT VALUES.

C. CONTRACTOR TO VISIT THE SITE AND VERIFY ALL (E) CONDITION. IF DIFFERENT THAN WHAT IS SHOWN, SUBMIT CLARIFICATION LETTER TO ELECTRICAL ENGINEER FOR EVALUATION PRIOR TO CONDUCTING ANY WORK.

D. WHERE CABLES/CONDUITS PASS THRU FIRE RATED WALL, PROVIDE CONDUIT SLEEVE AND SEAL PENETRATION TO MAINTAIN FIRE RATING OF WALL. ALSO SEAL AROUND CABLES. TYPICAL FOR ALL LOCATIONS (SEE ARCHITECTURAL DRAWINGS FOR LOCATIONS OF FIRE RATED WALLS.

E. MECHANICALLY ATTACH NAME TAGS TO EQUIPMENT COVER IDENTIFYING USE IN 1/2" ENGRAVED WHITE LETTERS ON BLACK BACKGROUND (I.E., PANEL H, L).

F. NFPA 70E AND NEC ARTICLE 110.16 REQUIRES FACILITY OWNERS TO PERFORM A FLASH HAZARD ANALYSIS PRIOR TO ALLOWING A PERSON TO PERFORM WORK ON ENERGIZED EQUIPMENT. THE ANALYSIS IS NECESSARY FOR DETERMINING THE FLASH PROTECTION BOUNDARY DISTANCE AND THE TYPE OF PPE REQUIRED. THE CONTRACTOR SHALL PROVIDE A FLASH HAZARD ANALYSIS AND WARNING LABELS ON ALL ELECTRICAL EQUIPMENT.

(#) NOTES:

1. REFER TO PANEL SCHEDULE FOR ADDITIONAL INFORMATION.

PANEL: **HSP-2, RM 100B** — 120/208V, 3-PHASE, 4-WIRE — NEMA 1 - RECESSED

MAIN: 225A — BUS AMPACITY: 1000 A — 35 kA (IC) SYMMETRICAL

TYPE	DESCRIPTION	DEVICE	CKT	LOAD/PHASE (VA) A	B	C	A	B	C	CKT	DEVICE	DESCRIPTION	TYPE
	HVAC	250/3	1							2			
			3							4	150/3	AC-2	
			5							6			
			7							8			
			9							10			
			11							12			
	PNL "A"	100/3	13							14			
			15							16	70/3		
			17							18			
	AC/CU-T2	50/2	19				1000			20			
			21					1000		22	15/3	HU-2	
			23						1000	24			
	AC/CU-T1	50/2	25							26			
			27							28	100/3	SPARE	
			29							30			
	PNL "1LB"	250/3	31							32			
			33							34	250/3	PNL "1LA"	
			35							36			
	PDSC-101	100/3	37							38	15/2	FC/T2 FAN	
			39							40			
			41							42	100/2	FC/T1 FAN	
	EF-5	15/3	43							44			
			45							46			
			47							48			
SUBTOTAL (VA)				0	0	0	1000	1000	1000	SUBTOTAL (VA)			
TOTAL ALL PHASES (VA)				PHASE A			PHASE B			PHASE C		TOTAL ALL PHASES (A)	
3000				1000			1000			1000		8	

PANEL: **ORANGE, RM 106** — 120/208V, 3-PHASE, 4-WIRE — NEMA 1 - RECESSED

MAIN: 225A — BUS AMPACITY: 800 A — 35 kA (IC) SYMMETRICAL

TYPE	DESCRIPTION	DEVICE	CKT	LOAD/PHASE (VA) A	B	C	A	B	C	CKT	DEVICE	DESCRIPTION	TYPE
		20/2	1							2	20/1		
			3							4	20/1		
			5			1000				6	20/1		
	HU-3	20/3	7	1000						8			
			9		1000					10	15/3	FC-3	
			11							12			
	OLD HVAC	90/3	13							14			
			15							16			
			17							18			
	PNL "2LB"		19							20			
			21							22	250/3	DPLA	
			23			21496				24			
	AC-3	225/3	25	21496						26			
			27		21496					28			
	UPS		29							30			
			31							32			
			33							34			
			35							36			
			37							38			
			39							40			
			41							42			
SUBTOTAL (VA)				22496	22496	22496	0	0	0	SUBTOTAL (VA)			
TOTAL ALL PHASES (VA)				PHASE A		PHASE B			PHASE C			TOTAL ALL PHASES (A)	
67488				22496		22496			22496			187	

PANEL: **HVAC-1, ROOF ACCESS RM** — 120/208V, 3-PHASE, 4-WIRE — NEMA 1 - RECESSED

MAIN: MLO — BUS AMPACITY: 400 A — 65 kA (IC) SYMMETRICAL

TYPE	DESCRIPTION	DEVICE	CKT	LOAD/PHASE (VA) A	B	C	A	B	C	CKT	DEVICE	DESCRIPTION	TYPE
			1							2	20/1		
	OLD AIR COMPRESSOR	XX/3	3							4	20/1		
			5							6	20/1		
			7	1000						8	20/1	ROOF	
	HU-1	15/3	9		1000					10	20/1		
			11				1000			12	20/1	EF-2	
	CU (ROOF)	50/2	13							14		FC	
			15							16			
			17							18			
			19							20			
			21							22			
			23							24			
			25							26	150/3	AC-1	
			27							28			
			29							30			
			31							32			
			33							34			
			35							36			
			37							38			
			39							40			
			41							42			
SUBTOTAL (VA)				1000	1000	1000	0	0	0	SUBTOTAL (VA)			
TOTAL ALL PHASES (VA)				PHASE A		PHASE B			PHASE C			TOTAL ALL PHASES (A)	
3000				1000		1000			1000			8	

A Tradition of Stewardship
A Commitment to Service

MK2 ENGINEERS

Green Valley Executive Center
5030 Business Center Drive,
Suite 150
Fairfield, CA 94534
(707) 759-5260
www.mk2eng.com

REGISTERED PROFESSIONAL ENGINEER — TOMAS F. DORDAL JR. — E 16109 — EXP. 12-31-21 — ELECTRICAL — STATE OF CALIFORNIA

THE DRAWINGS, PLANS, SPECIFICATIONS, ELECTRONIC DATABASE AND OTHER INSTRUMENTS OF PROFESSIONAL SERVICE PREPARED BY OR ON BEHALF OF CONSULTANT SHALL BECOME THE PROPERTY OF THE OWNER UPON PAYMENT FOR SUCH WORK. THESE DRAWINGS HAVE BEEN PREPARED SPECIFICALLY FOR THIS PROJECT AND SHALL NOT BE USED FOR ANY OTHER PROJECT, BY ANY OTHER ENTITY OR IN ANY OTHER LOCATION.

811 Know what's below. Call before you dig.

CALL 811 TWO FULL BUSINESS DAYS, MAXIMUM 14 CALENDAR DAYS, BEFORE DIGGING.

No.:	Revision:	Date:
	650 IMPERIAL WAY BID SET	2020-09-24

NAPA COUNTY PUBLIC WORKS

PROJECT:
650 IMPERIAL WAY - HVAC SYSTEM UPGRADE
PROJECT PW 18-03

650 IMPERIAL WAY
NAPA, CA 94559

SHEET CONTENTS:

SINGLE LINE DIAGRAM AND SCHEDULES

ELECTRICAL

BID SET

PROJECT DATE:	2020/02/05
SCALE:	AS NOTED
SHEET ISSUED DATE:	2020/09/24
APPROVED BY:	TD
DESIGN BY:	TD/KD
DRAWN BY:	DC/KD/AJ
CHECKED BY:	TD/KD
PROJECT NO.:	PW 18-03 / 20003.00

SHEET NO.:

E5.01

650 IMPERIAL WAY HVAC SYSTEM UPGRADE PW 18-03 BID SET – 2020/09/24

P:\2020\20003 – 650 IMPERIAL WAY – HVAC\DRAW\MK2-FILES\20003 – E5-01.DWG – PLOTTED BY DAVID COLEMAN

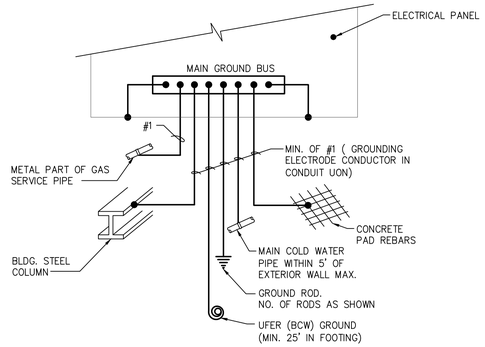

GROUNDING SYSTEM 9
NOT TO SCALE E7.01

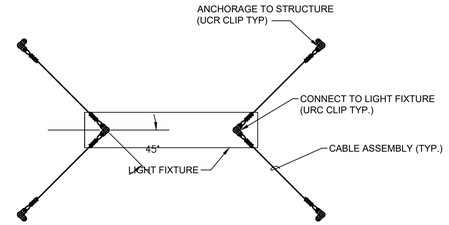

NOTE:

REFER TO SPECIFICATIONS, LODS & CO., INC. MANUAL AND TABLES FOR BRACE SPACING, REQUIRED BRACING LOCATIONS , LOAD CALCULATIONS PROCEDURES, SIZING, AND ALLOWABLE LOADS ON BRACE ASSEMBLIES AND FASTENERS.

SEISMIC WIRE ROPE/CABLE BRACING DETAIL 5
NOT TO SCALE E7.01

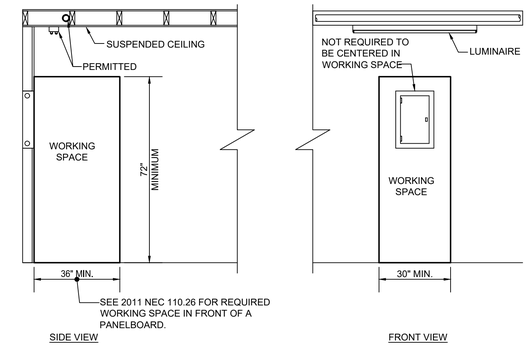

WORKING SPACE AROUND PANELBOARD 1
NOT TO SCALE E7.01

MULTIPLE UNIT MAX SPACING - WALL-MOUNT					
Mounting Height	7.5'	10'	12'	16'	20'
Max Spacing @ 1FC Avg	54'	74'	75'	60'	58'
Max Spacing @ 1FC Min	31'	34'	34'	42'	34'
SINGLE UNIT MAX SPACING - WALL-MOUNT					
Mounting Height	7.5'	10'	12'	16'	20'
Max Spacing @ 1FC Avg	36'	48'	68'	54'	NA
Max Spacing @ 1FC Min	12'	12'	14'	18'	NA

* Results assume Wall Mount with 6'-wide path of egress in 15'-wide aisle of 200X200'X30', open warehouse with reflectances of 10/10/10

** Based upon 522.7 lumens per lamp for a total of 1,045 delivered lumens.

For ceiling mounted applications, simply aim the lamp heads straight down to create a uniform well-lit path of egress.

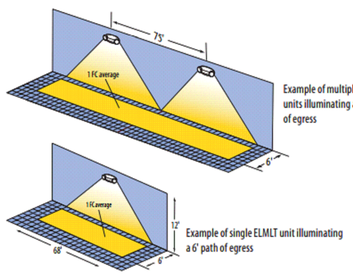

EMERGENCY LIGHT PHOTOMETRIC GUIDELINES 10
NOT TO SCALE E7.01

GENERAL FIXTURE NOTES :

A. INSTALL FIXTURE IN STRICT ACCORDANCE WITH MANUFACTURERS PRINTED INSTRUCTIONS.

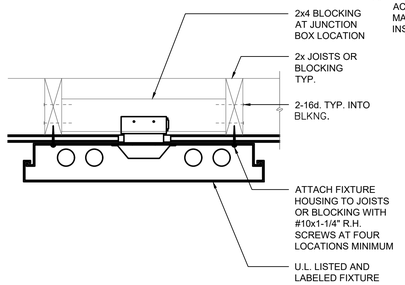

SURFACE MOUNTED LIGHT FIXTURE DETAIL 6
NOT TO SCALE E7.01

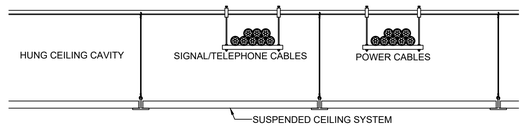

INSTALLATION ABOVE SUSPENDED CEILINGS 2
NOT TO SCALE E7.01

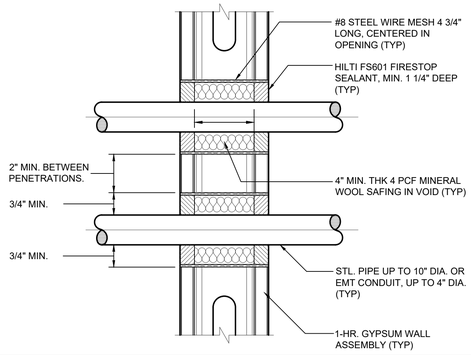

CONDUIT THROUGH 1-HOUR RATED GYPSUM WALL 7
NOT TO SCALE E7.01

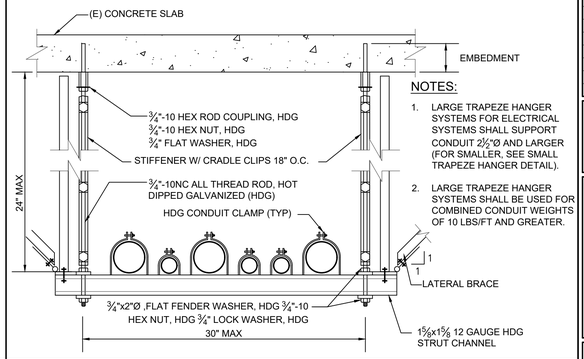

NOTES:

1. LARGE TRAPEZE HANGER SYSTEMS FOR ELECTRICAL SYSTEMS SHALL SUPPORT CONDUIT 2½"Ø AND LARGER (FOR SMALLER, SEE SMALL TRAPEZE HANGER DETAIL).
2. LARGE TRAPEZE HANGER SYSTEMS SHALL BE USED FOR COMBINED CONDUIT WEIGHTS OF 10 LBS/FT AND GREATER.

TYPICAL LARGE TRAPEZE HANGER 3
NOT TO SCALE E7.01

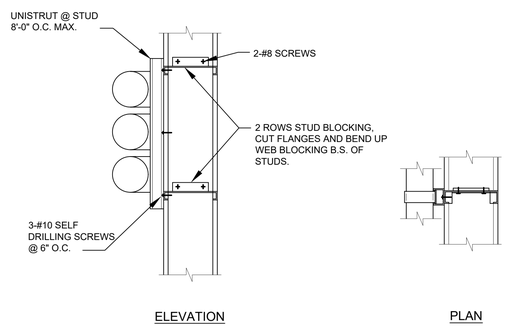

CONDUIT SUPPORT AT STUD DETAIL 4
NOT TO SCALE E7.01

NOT USED 13
NOT TO SCALE E7.01

NOT USED 9
NOT TO SCALE E7.01

NOT USED 5
NOT TO SCALE E7.01

NOT USED 1
NOT TO SCALE E7.01

NOT USED 14
NOT TO SCALE E7.01

NOT USED 11
NOT TO SCALE E7.01

NOT USED 7
NOT TO SCALE E7.01

NOT USED 3
NOT TO SCALE E7.01

NOT USED 15
NOT TO SCALE E7.01

NOT USED 12
NOT TO SCALE E7.01

NOT USED 8
NOT TO SCALE E7.01

NAPA COUNTY CALIFORNIA

A Tradition of Stewardship
A Commitment to Service

MK2 ENGINEERS

Green Valley Executive Center
5030 Business Center Drive,
Suite 150
Fairfield, CA 94534
(707) 759-5260
www.mk2eng.com

REGISTERED PROFESSIONAL ENGINEER TOMAS F. DORDAL JR. E 16109 EXP. 12-31-21 ELECTRICAL STATE OF CALIFORNIA

THE DRAWINGS, PLANS, SPECIFICATIONS, ELECTRONIC DATABASE AND OTHER INSTRUMENTS OF PROFESSIONAL SERVICE PREPARED BY OR ON BEHALF OF CONSULTANT SHALL BECOME THE PROPERTY OF THE OWNER UPON PAYMENT FOR SUCH WORK. THESE DRAWINGS HAVE BEEN PREPARED SPECIFICALLY FOR THIS PROJECT AND SHALL NOT BE USED FOR ANY OTHER PROJECT, BY ANY OTHER ENTITY OR IN ANY OTHER LOCATION.

811 Know what's below. Call before you dig.

CALL 811 TWO FULL BUSINESS DAYS, MAXIMUM 14 CALENDAR DAYS, BEFORE DIGGING.

No.:	Revision:	Date:
	650 IMPERIAL WAY BID SET	2020-09-24

NAPA COUNTY PUBLIC WORKS

PROJECT:
650 IMPERIAL WAY - HVAC SYSTEM UPGRADE
PROJECT PW 18-03

650 IMPERIAL WAY
NAPA, CA 94559

SHEET CONTENTS:

DETAILS

ELECTRICAL
BID SET

PROJECT DATE:	2020/02/05
SCALE:	AS NOTED
SHEET ISSUED DATE:	2020/09/24
APPROVED BY:	TD
DESIGN BY:	TD/KD
DRAWN BY:	DC/KD/AJ
CHECKED BY:	TD/KD
PROJECT NO.:	PW 18-03 / 20003.00

SHEET NO.:

E7.01

650 IMPERIAL WAY HVAC SYSTEM UPGRADE PW 18-03 BID SET - 2020/09/24

P:\2020\20003 - 650 IMPERIAL WAY - HVAC\DRAW\MK2-FILES\20003 - E7-01.DWG - PLOTTED BY DAVID COLEMAN