2020

Adopted April 27, 1971

Revised May 10, 1977

Revised August 18, 1987

Revised June 5, 1990
{Ordinance 854}

Revised August 2, 1999
{Ordinance 1160}

Revised August 31, 2004
{Resolution 04-150}

Revised November 21, 2006
{Resolution 06-198}

Revised August 9, 2011
{Resolution 2011-95}

Revised January 26, 2016
{Resolution 2016-06}

Revised June 7, 2016
{Resolution 2016-72}

Revised October 4, 2016
{Resolution 2016-131}

Revised November 22, 2016
{Resolution 2016-167}

Revised September 26, 2017
{Resolution 2017-156}

Revised April 23, 2019
{Resolution 2019-053}

Revised February 4, 2020
{Resolution 2020-12}

A Tradition of Stewardship
A Commitment to Service

NAPA COUNTY
ROAD & STREET STANDARDS

Department of Planning, Building & Environmental Services
1195 Third Street * 2nd Floor * Napa, California 94559
Phone: (707) 253-4417 * Fax: (707) 299-4138 * www.countyofnapa.org

Table of Contents

SECTION ..... PAGE NO.

1. OBJECTIVES 1
2. SCOPE OF STANDARDS 2
3. EXCEPTIONS TO STANDARDS 3
4. DEFINITIONS 4
5. LOCAL RESPONSIBILITY AREA (LRA) EXCEPTION 8
6. [RESERVED.] 9
7. [RESERVED.] 9
8. PRIVATE ROAD DEVELOPMENTS 9
9. PARKING REQUIREMENTS 9
10. PEDESTRIAN, BICYCLE AND/OR BUS FACILITIES 9
11. CURB, GUTTER AND SIDEWALK 10
12. RESIDENTIAL DRIVEWAYS 10
13. COMMERCIAL, INDUSTRIAL AND NON-RESIDENTIAL DRIVEWAYS 11
14. STREET AND ROAD CLASSIFICATIONS 11
    - Major Roads 11
    - Minor Roads 11
15. DESIGN CRITERIA 13
    - Roadway Width 13
    - Roadway Surface 13
    - Roadway Grade 13
    - Road Radius 14
    - Vertical Curves 14
    - Roadway Turnarounds 14
    - Roadway Turnouts 15
    - Roadway Structures 15
    - One-Way Roads 15
    - Dead-End Roads 16
    - Agricultural Roads 16
    - Residential Driveways 16
    - Design Criteria Chart 18
16. INDUSTRIAL AND COMMERCIAL DEVELOPMENT 19
17. TRAFFIC CONTROL DEVICES 19
    - Left Turn Lane Warrant Graph 21

18. TYPICAL CROSS SECTIONS 22
C-1 Arterial Cross Sections 23
C-2 Arterial Cross Sections Without Parking 23
C-3 Collector Cross Sections 24
C-4 General Minor Cross Sections 26
C-5 Non-Continuing Minor, Loop Road and Cul-De-Sac 27
C-6 One Way Loop Cross Sections 27
C-7 Common Drive Cross Sections 28
C-8 Industrial Collector Standards 29
C-9 Industrial Minor 30
C-10 Residential Driveway or Agricultural Road 31
C-11 Standard Driveway Turn Out 33
C-13 Standard Hammerhead Turnaround 35
C-14 Residential Driveway Shunt Turnaround 35
19. DETERMINATION OF TRAFFIC VOLUMES 37
20. DETERMINATION OF STRUCTURAL SECTION 37
Traffic Index Chart 38
Structural Section Thickness Chart 38
21. GRADING REQUIREMENTS AND SOILS INVESTIGATIONS (FOR ROADS) 40
22. DRAINAGE REQUIREMENTS 40
Design Discharge For Small Basins 43
Watershed Types and Factors 44
Precipitation Chart – Lower County 47
Precipitation Chart – Upper County 48
Mean Annual Precipitation vs. 60 Minute Rainfall 49
Intensity – Duration Chart 50
Critical Slopes and Capacities of Round Pipes Table 50
Nomograph Chart 52
Unlined Channel Velocity 52
23. PLANNED UNIT DEVELOPMENT AND OTHER TYPES 54
24. ASSESSMENT DISTRICTS 54
25. PARCEL MAP IMPROVEMENTS - RESIDENTIAL DEVELOPMENT 55
26. PARCEL MAP IMPROVEMENTS - COMMERCIAL AND INDUSTRIAL DEVELOPMENT 56
27. SPECIFICATIONS 56
Road and Streets 56
Utilities 57

Drainage 58
Street Signs 58
Monuments 58
General 59
Hydrant/Fire Valve 59
Signing of Water Sources 60
Permits 60
STANDARD DETAILS 61
P-1 On Lot Parking Detail 62
P-2 Driveway Connection to Arterial Roads – Rural Roads 63
P-3 Residential Driveway and Adjoining Sidewalk 63
P-4 Commercial and Industrial Driveway and Adjoining Sidewalk 65
P-5 Standard Vertical Curb and Gutter 66
P-6 Mountable Curb 67
P-7 P.C.C. Cross Gutter 68
P-8 Standard Asphalt Dike 69
P-9 Typical Dike Installation 70
P-10 Trench Backfill Typical Section 71
P-11 Drainage Outlet 72
D-1 Storm Drain Inlet Type "A" 73
D-2 Storm Drain Inlet Type "B" 74
D-3 Storm Drain Inlet Type "C" 75
D-4 Standard Barricade 76
D-5 Driveway Setback 77
D-6 Standard Street Sign 78
D-6a Standard Street Signs, Type 'A' and Type 'B' 79
Subdivision Street Monuments Accuracy 80
D-7 Survey Monument 81
D-8 Off Street Parking 82
D-9 Handicap Symbol 83
D-10 Wheel Chair Ramp 84
D-11 Gated Entrance 85
D-12 Address Signage 86

1. OBJECTIVES

The following material was originally prepared through the cooperation of the Road Standards Advisory Committee of 1970. Since then, updates have been incorporated to reflect changes in accepted health and safety practices and to comply with changes in County Ordinances and State and Federal Law. These Road and Street Standards ("Standards") attempt to meet the related interests of several other agencies, including but not limited to, the Resource Conservation District, California Board of Forestry and Fire Protection (CBOF), CAL FIRE, Napa County Fire Department, Napa County Planning, Building and Environmental Services (PBES) Department, Napa County Public Works Department, the Federal Emergency Management Agency, and the California Department of Fish and Wildlife. The objectives of these Standards are summarized below:

(a) To provide reasonable Standards that relates to terrain and parcel size.
(b) To preserve the natural landscape and desirable aesthetic features while balancing the needs of property owners.
(c) To encourage the location of roads to minimize disturbance or impacts on wetlands, critical native plant communities, or other environmentally sensitive areas.
(d) To minimize diversion and concentration of storm runoff, including selection of appropriate discharge locations, outlet dispersion appurtenances and selection of practices that maximize soil infiltration.
(e) To encourage use of native grasses and other native plant materials for erosion control and habitat enhancement.
(f) To minimize alteration of streams and ephemeral drainage at discharge outfalls, utilizing "bio-technical" stream stabilization techniques and preservation of natural stream morphological conditions.
(g) To identify "impacted" runoff basins where special design considerations may be necessary to minimize downstream flooding and other impacts to neighboring properties.
(h) To provide adequate safety and service.
(i) To provide low maintenance cost road facilities.
(j) To produce Standards compatible with city requirements within areas of influence.

The Standards were developed and revised over the years in an effort to meet all of the objectives noted above while striving to maintain the preservation of the health, safety, and welfare of the public. The 2020 revisions are intended to provide clarification and flexibility in order to ensure conformance with local, State and Federal regulations while also incorporating appropriate general engineering and construction practices and accommodation of unique project elements.

Users of the Standards are encouraged to become familiar with all of the codes, rules, regulations, and guidance documents available. These include, for example, the State

Responsibility Area Fire Safe Regulations (SRA Fire Safe Regulations)[1]; the Conservation Regulations; Floodplain Ordinance; Grading Ordinance; Policies, Practices and County Code Sections Administered by the Environmental Health Division of the PBES Department; County Fire Code; Policies and Procedures of the California Department of Fish and Wildlife (DFW); the State Water Resources Control Board's Construction General Permit; the BASMAA Post-Construction Manual; and the Napa Countywide Stormwater Pollution Prevention Program Erosion and Sediment Control Plan Guidance manual. Roadway design guidance can be found in "A Policy on Geometric Design of Highways and Streets" generated by the American Association of State Highway and Transportation Officials ("AASHTO"), and the Caltrans "Highway Design Manual" and "Standard Specifications." Where these Standards refer to the Caltrans Specifications or the Caltrans Standard Specifications, the reference shall mean the current edition of the Caltrans Standard Specifications.

2. SCOPE OF STANDARDS

These Standards are not applicable retroactively to existing roads, streets and driveways or facilities. These Standards shall apply to all construction within the unincorporated portions of Napa County beginning on the date they are adopted by the Board of Supervisors. Activities which will trigger application include, but are not limited to:

(a) Application for a building permit for new construction (as defined on Page 7), not relating to an existing structure,

(b) Application for a building permit for any work, addition to, remodel, repair, renovation, or alteration of any building or structure that results in:

i. fifty percent increase or more of square footage, and
ii. the increase is greater than 1,500 square feet;
iii. The application of (i) and (ii) will be evaluated as construction accumulated on the same structure within a 36 month time period,

(c) Application for a Use Permit, a Major Modification or a Minor Modification that proposes a cumulative average daily traffic (ADT) volume greater than 40.

(d) Change of use and/or occupancy classification of an existing structure,

(e) Road construction, including construction of a road that does not currently exist, or extension of an existing road or parking lots,

(f) New subdivisions created by Parcel Map or Final Map,

(g) Conditional certificates of compliance.

(h) Left turn lane warrant and/or other public road improvement required by the Director of Public Works.

[1] The SRA Fire Safe Regulations are set forth at Title 14, the Natural Resources Division of the California Code of Regulations, Division 1.5, Chapter 7 Fire Protection, Subchapter 2 SRA Fire Safe Regulations.

In the event a structure is destroyed by a disaster the reconstruction of the existing structure may not be considered new construction and may find relief from these Standards provided the following two conditions are met:

(a) The replacement structure's livable space will not be greater than 125 percent of the original structure's livable space (based on square footage), and

(b) Napa County staff determines the driveway was not a contributing factor in delaying or prohibiting emergency responders from accessing the original structure or for safe evacuation during the disaster.

If both provisions above cannot be met, then the reconstruction of the existing structure shall be considered new construction and subject to these Standards accordingly.

3. EXCEPTIONS TO STANDARDS

(a) A property owner or leaseholder of a site seeking an exception to an applicable provision of the Standards shall make a written request to the Director of PBES for review and concurrence by the County Engineer and Fire Marshal. The request shall state the specific section(s) for which an exception is requested, material facts supporting the contention of the developer, the details of the exception or mitigating measures proposed, a map showing the proposed location and siting of the exception or mitigation measures, and shall be accompanied by that fee established by resolution of the Board of Supervisors.

(b) An application for an exception from these Standards submitted in connection with a building permit clearance for a single family residence shall be decided by the Zoning Administrator after the appropriate environmental review has been completed by the PBES Department. An application for an exception from these Standards submitted in connection with a use permit, variance, subdivision map or other discretionary permit shall be heard and decided by the Planning Commission or other approving body at the same time as the use permit, zoning variance, subdivision map or other discretionary permit.

(c) An exception to these Standards, when properly submitted, reviewed, and approved by the Zoning Administrator, Planning Commission or other approving body, is intended to serve as an alternate method by which adherence to these Standards may be achieved at the same time as the County assures compliance with its goal to protect and ensure the preservation of the unique features of the natural environment. It is also intended to ensure compliance with the SRA Fire Safe Regulations and procedures set forth therein.

(d) An exception to these Standards may be allowed as provided if one or more of the following findings can be made and the findings in subsection (e) can also be made:

i. The exception will preserve unique features of the natural environment which includes, but is not limited to, natural water courses, steep slopes, geological features, heritage oak trees, or other trees of least six inches in diameter at breast height and found by the decision-maker to be of significant importance, but does not include

human altered environmental features such as vineyards and ornamental or decorative landscaping, or artificial features such as, rock walls, fences or the like;

ii. The exception is necessary to accommodate physical site limitations such as grade differentials; and/or

iii. The exception is necessary to accommodate other limiting factors such as recorded historical sites or legal constraints.

Exceptions are only allowed "where the exceptions provide the same overall practical effect as 'the SRA Fire Safe Regulations' towards providing defensible space." Exceptions shall be made on a case-by-case basis only. Exceptions granted by the County shall be forwarded to the Sonoma-Lake-Napa Unit of CAL FIRE.[2]

(e) The Zoning Administrator, Planning Commission, or other approving body shall not grant an exception unless it finds that grant of the exception, as conditioned by the Zoning Administrator, the Planning Commission, or other approving body provides the same overall practical effect as these Standards towards providing defensible space, and consideration towards life, safety and public welfare. Monetary hardship alone shall not be considered as a basis for an exception.

(f) The Fire Department shall recommend to the Zoning Administrator, the Planning Commission or other approving body that certain conditions (as determined necessary by the Fire Department) be imposed on the project to achieve the same overall practical effect as these Standards towards providing defensible space, consideration of life, safety and public welfare and not compromising civilian egress or Fire Department access. Such conditions may include, but are not limited to, installation of built in fire protection systems, limited marketing events or visitors to the site, and improved defensible space for structures and roads.

(g) Notwithstanding the above, a request for an exception to these Standards for a public road or public drainage facility (i.e., catch basins, storm drain lines, bio-retention areas, etc.) shall be decided by the Director of Public Works and determined on a case-by-case basis.

(h) The grant or denial of an exception shall be considered part of the decision of the underlying permit and appeals shall be processed in the same manner as provided by the Napa County Code for appeals of the underlying permit.

4. DEFINITIONS

'AB'	Aggregate Base – a gravel mixture meeting material and compaction requirements as defined in Section 26 of the Caltrans Standard Specs.
'Average Daily Traffic'	(ADT) The average 24-hour traffic volume, both cumulative in-bound and out-bound trips, at a given location during peak season (e.g. harvest season August 15 – October 31).
'Bay'	A clearly delineated space in a designated parking area

[2] 14 CCR 1270.07 and 1270.09.

'Building'	Any structure used or intended for supporting or sheltering any use of occupancy except utility and miscellaneous Group U structures.
'CAL FIRE'	California Department of Forestry and Fire Protection -Sonoma-Lake-Napa Unit of CAL FIRE.
'Caltrans'	The State of California, Department of Transportation.
'Caltrans Standard Specs'	State of California, Department of Transportation, Standard Specifications in latest edition.
'County Engineer'	The PBES Engineering Manager or designee.
'Dead-end road'	A road that has only one point of vehicular ingress/egress, including cul-de-sacs.
'Defensible Space'	The area within the perimeter of a parcel, development, neighborhood or community where basic wildland fire protection practices and measures are implemented, providing the key point of defense from an approaching wildfire or defense against encroaching wildfires or escaping structure fires. The perimeter as used in this regulation is the area encompassing the parcel or parcels proposed for construction and/or development, excluding the physical structure itself. The area is characterized by the establishment and maintenance of emergency vehicle access, emergency water reserves, street names and building identification, and fuel modification measures.
'Developer'	The owner of land on which activities are proposed which are subject to the application of these Standards, as listed in Section 2 (Scope of Standards) above, or designated representative of the landowner.
'Distance Measurements'	All specified or referenced distances are measured along the ground, unless otherwise measured.
'Drivable Shoulder'	See shoulder.
'Drivable Swale'	A shallow sloped drainage way that runs parallel to the travel lane of a driveway and is surfaced with non-erodible material designed to support apparatus weighing 75,000 pounds at all times even during periods of saturation. For guidance refer to Section 1411.7 of Chapter

	7, Division 2, Title 21 of the California Code of Regulations for axle weight distribution.
'Driveway'	A privately owned and maintained access road connecting a parcel to a public or private roadway.
'Dwelling Unit'	See residential unit.
'Engineer'	The agent of the developer with the responsibility for the preparation of construction plans for the activities which are subject to the application of these Standards, as listed in Section 2 (Scope of Standards) above.
'Exception'	An alternative to the specified standard requested by the developer that may be necessary due to health, safety, environmental conditions, physical site limitations or other limiting conditions such as recorded historical sites that mitigates the problem.
'Fire Marshal'	The Napa County Fire Department Fire Marshal or designee.
'Fuel Modification Area'	An area where the volume of combustible vegetation has been reduced, providing reduced fire intensity and duration.
'Greenbelts'	A facility or land-use, designed for a use other that fire protection, which will slow or resist the spread of a wildfire. Includes parking lots, irrigated or landscaped areas, golf courses, parks, playgrounds, maintained vineyards, orchards or annual crops that do not cure in the field. Subdivision and other developments, which propose greenbelts as a part of the development plan, shall locate said greenbelts strategically, as a separation between wildland fuels and structures. The locations shall be approved by the local authority having jurisdiction and may be consistent with the CAL FIRE Unit Fire Management Plan or Contract County Fire Plan.
'HMA'	Hot Mix Asphalt (HMA) meeting material and compaction requirements as defined in Section 39 of the Caltrans Standard Specs.
'Inspection Authority'	The CBOF has certified the several Napa County Ordinances that expressly incorporate these Standards into the Napa County Code (14 CCR Sections 1270.1 and 1270.3). In accordance with 14 CCR Section 1270.05, Napa County has been delegated Inspection Authority for ensuring compliance with the SRA Fire Safe

	Regulations.[3] For the purposes of Napa County's implementation of this authority and compliance with the Standards, "Inspection Authority" and/or "Local Jurisdiction" shall be vested with the Napa County Fire Chief who with their authority has delegated the Inspection Authority to the Napa County Fire Marshal.
'Inter-Visible Turnout'	Turnouts where the driver of a vehicle within a turnout can visibly identify a vehicle in the other turnout and vice versa.
'New Construction'	Construction of a new structure not relating to an existing structure. Related structures include but are not limited to: accessory utility and miscellaneous Group U buildings, and guest cottages
'Paved'	A road surface meeting either the minimum structural section of 2 inches HMA over 5 inches Class 2 AB or as designed and approved by the County Engineer with both meeting Caltrans Standard Specs for material type and compaction.
'PBES'	Planning, Building and Environmental Services Department.
'Residential Unit'	Any Building or portion thereof which contains living facilities, including provisions for sleeping, eating, cooking, and/or sanitation for one or more persons. Manufactured homes, mobile homes, and factory-built housing are considered residential units for the purposes of mandatory measure
'Roadway'	Any surface designed, improved or ordinarily used for vehicle travel that is either publicly owned and maintained, or privately owned and maintained, but dedicated for public use.
'Same Practical Effect'	Means an exception or alternative with the capability of applying accepted wildland fire suppression strategies and tactics, and provisions for fire fighter safety, including, but not limited to: (a) Access for emergency wildland fire equipment, (b) Safe civilian evacuation, (c) Signing that avoids delays in emergency equipment response, (d) Available and accessible water to effectively attack wildfire or defend a structure from wildfire, and (e) Fuel modification sufficient for civilian and fire fighter safety.
'Shoulder'	Vehicular access adjacent to the traffic lane.

[3] A copy of the aforementioned letter from CAL FIRE delegating Inspection Authority in accordance with 14 CCR 1270.05 is attached to these Standards as Appendix "A".

'Travel Lane'	The surfaced portion of the travel way that is designed to carry the daily traffic volume.
'Travel Way'	The combination of travel lane and drivable shoulder that shall constitute the full width area a vehicle can safely traverse.
'Utility and Miscellaneous Group U Buildings'	As defined in the current California Building Code.
'Wildfire'	As defined in the current Public Resources Code Section 4103 and 4104.
'Zoning Administrator'	The Napa County Director of Planning, Building and Environmental Services has been appointed by the Napa County Board of Supervisors to serve as the Napa County Zoning Administrator in accordance with the Napa County Code and Government Code Sections 65900, et seq.

5. LOCAL RESPONSIBILITY AREA (LRA) EXCEPTION

Improvements to an existing driveway are not required for the construction of new second dwelling units located in the LRA. For new second dwellings that require new access driveways, the new access driveways shall be constructed to the residential driveway standard from the point of access to the new second dwelling unit.

Furthermore, in addition to the exceptions provided for in Section 3(d), of these Standards, owners and leaseholders of property that is located completely within the LRA and not designated as being in a Very High Fire Hazard Severity Zone (VHFHSZ), may make an application for an exception to these Standards. The exception request must provide measures which provide safe access for emergency apparatus, safe civilian evacuation, and the avoidance of delays in emergency response based on the demands of the property as determined by the County Engineer and Fire Marshal on a case-by-case basis.

Unlike exceptions within the SRA or for property located within the VHFHSZ, exceptions for property located completely within the LRA *may* be permitted when they do not provide the same overall practical effect as the SRA Fire Safe Regulations. The overall safety of the residents, visitors, and first responders to fires and other incidents within Napa County, however, will remain a factor in determining whether or not an exception shall be granted for property solely within the LRA that is not in a VHFHSZ. Section 3 of these Standards shall apply to properties designated as being in a VHFHSZ.

The application for an exception will be made in the manner addressed in Section 3 of these Standards. Any exceptions granted under this provision must comply with all applicable

Federal, State, and Local laws and regulations. The provisions of Section 5 exclude any public road improvement required by these Standards or by the Director of Public Works.

6. [RESERVED.]

7. [RESERVED.]

8. PRIVATE ROAD DEVELOPMENTS

Private road developments may be allowed upon specific approval of the County, and are subject to the same improvement requirements as public road requirements. However, the roads will not be maintained by the County. In order to secure access rights for the public, developers are generally required to offer to dedicate roadways but the County will not accept maintenance responsibility for the roads that are to remain private.

9. PARKING REQUIREMENTS

(a) Off-street parking space requirements for new or modified structures and new uses shall be as required by Napa County Code Chapter 18.110 and 18.104 or as required by the County Engineer or approving body based on the required parking demand associated with the proposed use, see Detail P-1 and D-8 for design standards. Parking maximums may be set and enforced by the County Engineer or approving body to prevent over-supply of parking that could stimulate unnecessary vehicle trips or commercial activity exceeding the site's capacity.

(b) Full street parking consisting of bays, parallel parking lanes, or an acceptable alternate as long as the distance from the parking bay to the lot served does not exceed 150 feet. Set back requirements shall be shown on a document to be recorded concurrently with the final subdivision map, parcel map, and/or development project. All streets without on-street parking provisions shall be posted with "No Parking" signs or other suitable regulatory devices.

(c) An equivalent combination on lot parking and street parking may be approved by the County Engineer or approving body on a case-by-case basis.

(d) A parking demand survey may be required for any project proposing a substantial reduction in existing parking spaces as determined by the County Engineer.

(e) Housing and employment development projects shall include electric vehicle charging stations.

10. PEDESTRIAN, BICYCLE AND/OR BUS FACILITIES

(a) Fully improved Portland[4] cement concrete sidewalks will be provided on both sides of all roads as required by County Engineer in accordance with the typical cross sections.

(b) An improved walkway will be provided on both sides of urban arterial and collector roads as required by County Engineer.

---

[4] At the discretion of the County Engineer, types of cement that provide the same overall practical effect as Portland cement concrete may be utilized.

(c) Where development is located on an existing bus route, the Napa Valley Transportation Authority shall be consulted for recommended improvements based on the Transit Improvement Standards Handbook.

(d) Bicycle parking facilities shall be provided for all nonresidential uses as specified in Napa County Code chapter 18.110.040

Parking areas containing twenty or more spaces shall establish pedestrian crosswalks across the parking lot which shall connect building entries to sidewalks, pedestrian paths or outdoor use areas. Crosswalks shall incorporate appropriate special paving or treatment and landscaping to separate and define the pedestrian area from vehicular areas.

Additional pedestrian and/or bicycle facilities may be required if there is a potential for concentrated pedestrian and/or bicycle traffic in the opinion of the County Engineer. The Countywide Bicycle Plan and Countywide Pedestrian Plan shall be consulted for bicycle and pedestrian treatments.

11. CURB, GUTTER AND SIDEWALK

If all driveway locations within a subdivision are predetermined and constructed at the time of overall subdivision development, vertical curb and gutters with sidewalk improvements will be required.

If driveway locations are not provided at the time of subdivision road development, the mountable curb per Standard Detail P-6 will be used and any required sidewalks will be located with one side contiguous with the right of way line. Mountable curb will not be used on steep grades where it would be a hazard to the public, as determined by the County Engineer.

Entries to driveways along arterial collectors and minor streets shall be separated by a minimum distance of one hundred twenty-five feet or as required by the director of Public Works to ensure proper traffic circulation and safety.

12. RESIDENTIAL DRIVEWAYS

As part of the construction triggering application of these Standards, the property owner shall meet the common drive and/or residential driveway provisions (as defined in these Standards) applicable to the proposed improvement and site specific conditions, from the nearest publicly maintained road access to the new or improved structure. Refer to Section 15 for specific design criteria. Group "R" shall apply as defined in Section 310 of the California Building Code, and as defined in Section 1.1.3.1.1 of the California Residential Code.

13. COMMERCIAL, INDUSTRIAL AND NON-RESIDENTIAL DRIVEWAYS

As part of a new commercial, industrial, and non-residential (excluding utility and miscellaneous Group U buildings) use or improvements to an existing commercial, industrial or non-residential building requiring a building permit, the developer shall provide a minimum 20 foot wide driveway with a minimum of one foot of shoulder on each side of the roadway from the nearest publicly maintained road to the improved structure. See Detail C-7, Common Drive, for cross-section information. See Details D-5 and P-4 for urban driveways and Detail P-2 for rural driveways. As an alternative to meeting the common drive requirement the developer may provide a one-way loop road in accordance with these Standards and as approved by the County Engineer and Fire Marshal.

14. STREET AND ROAD CLASSIFICATIONS

The following list of street and road types is intended to be representative of typical subdivision development and does not include all roads and streets that will be encountered. Geometric requirements relative to highways, expressways, major roads, access roads, roads with access on one side only, and others are not specifically included in these Standards; requirements for such facilities will be determined on a case-by-case basis. See the appropriate subsequent sections for requirements for roads serving commercial and industrial areas. All roads are required to be paved with the exception of agricultural roads and residential driveways which shall be surfaced per Detail C-10. Upon request and approval by the County Engineer and Fire Marshal on a case by case basis, a common drive may meet the surfacing requirements as outlined in Detail C-10. Pavement structural sections shall be determined by the designed traffic index. The minimum structural section shall be two inches of HMA over five inches of Class 2 AB in accordance with Section 27 of these Standards.

	Street or Road	Definition
		MAJOR ROADS
(a)	Arterial	Connects collectors to highways, and other major arterials; functions primarily to carry traffic, estimated traffic volume 5,000 vehicles per day or more. May be two or more lanes, with or without median strips, and may have controlled access.
(b)	Collector	Generally collects traffic from lesser roads and also serves as access to adjacent land. Estimated traffic volume 1,000 to 5,000 vehicles per day.
		MINOR ROADS
(c)	General Minor	Serves primarily as access to adjacent land, carries up to 1,000 vehicles per day. Serves as access to more than six (6) parcels or developments that have a legal and practical potential for re-division into more than six (6) parcels.

(d)	Loop Road and Non-Continuing Minor	Serves abutting property; carries up to 250 vehicles per day.
(e)	Cul-de-Sac	Serves as an access road to abutting property; traffic volume up to 250 vehicles per day. (Cul-de-sac situations with lengths greater than 1,000 feet shall be provided with turnaround areas at 1,000 foot intervals and emergency access unless it is not considered feasible by the County Engineer.)
(f)	One Way Loop Roads	Serves as alternative access to residential, commercial, industrial, and non-residential uses. A minimum of one traffic lane width designated for traffic flow in one direction maximum length one-half mile; traffic volume up to 100 vehicles per day.
(g)	Common Drive	Serves as residential access for three (3) to six (6) parcels; or access for any commercial, industrial or non-residential uses, excluding small wineries which cumulative traffic along its access is less than or equal to 40 ADT. Developments that have a legal and practical potential for re-division into more than six (6) parcels will not qualify for use of common drives.
(h)	Residential Driveway	Serves as the minimum vehicular access to up to two (2) parcels with no more than two (2) residential units and any number of non-commercial or non-industrial buildings on each parcel.
(i)	Agricultural Road	Serves agricultural related facilities, and small wineries which cumulative traffic along its access is less than or equal to 40 ADT.
(j)	Split level	Split level means a roadway where each direction of travel has a different vertical alignment. Split level construction is permissible in all of the above defined categories if the design is satisfactory to the County Engineer.
(k)	Special Purpose Way	This applies to access to utility and miscellaneous Group U buildings, secondary access roads, emergency roads, bicycle paths, equestrian trails and other similar facilities when required by either the Fire Marshal, County Engineer or

County Code. The design will depend on each particular situation and be approved by the County Engineer. Acceptable provisions for maintenance must be established and dedication may be required.

15. DESIGN CRITERIA

Tabulated herein are the design criteria applicable to each of the street and road classifications in Section 14, (a) through (i) in terms of minimum design speed, minimum horizontal radius, minimum stopping sight distance, and maximum slopes. The radii shown are based on a negative cross slope of two percent which is typical for a newly-constructed street or road. If the street or road is super-elevated, the radius can be reduced accordingly. All streets and roads shall have a minimum longitudinal slope of 0.5 percent.

ROADWAY WIDTH: All streets, drives, and roads shall be constructed to provide a minimum of two 10-foot traffic lanes, of homogeneous surface, and a minimum of one foot of shoulder on each side of the roadway providing two-way traffic flow to support emergency vehicle and civilian egress, unless other standards are provided herein, or additional requirements are mandated by the inspection authority or local subdivision requirements. .

ROADWAY SURFACE: The surface shall provide unobstructed vehicular access. Roadway surfaces shall be designed and maintained to support the imposed load of fire apparatus weighing at least 75,000 pounds. For guidance, refer to Section 1411.7 of Chapter 7, Division 2, Title 21 of the California Code of Regulations for axle weight distribution. No traffic calming devices shall be installed on any private roadway surface unless approved by Fire Marshal.

ROADWAY GRADE: The grade for all roads, streets, private lanes and driveways shall not exceed 16 percent. The roadway grade may exceed 16 percent, not to exceed 20 percent, provided the following provisions are met:

(a) The length of road, street, private lane or driveway that exceeds a roadway grade of 16 percent but has a roadway grade equal to or less than 18 percent shall be surfaced with a minimum of 2 inches of HMA over 5 inches of Class 2 AB.

(b) The length of road, street, private lane or driveway that exceeds a roadway grade of 18 percent but has a roadway grade equal to or less than 20 percent shall be surfaced with a minimum of 3 inches of HMA over 5 inches of Class 2 AB or approved equal designed by a licensed engineer, shall not have a length greater than 300 feet, and shall have a roadway grade not exceeding 10 percent for 100 feet immediately preceding and ensuing the section of road with the roadway grade of 18 to 20 percent.

(c) The Inspection Authority retains the discretion to deny applications that meet the above Standards if there are other concerns that lead to the determination that these mitigations do not have the same overall practical effect of a 16 percent grade. There is no exception to a roadway grade greater than 20 percent.

(d) Provided subsections (a) and (b) above are met to the satisfaction of the Inspection Authority, and that the Inspection Authority has not denied the application per subsection (c), the proposed design shall be construed as meeting the same overall practical effect as meeting this standard and shall be considered an approved road exception.

ROAD RADIUS: No roadway or roadway structure shall have a horizontal inside radius of curvature of less than 50 feet and additional surface width of 4 feet shall be added to curves of 50 to 100 feet radius; 2 feet to those from 100 to 200 feet. A road horizontal inside radius of curvature less than 50 feet may be approved for residential driveways (excluding driveways serving commercial, industrial, or non-residential uses) provided the following:

(a) The horizontal curve is designed and modeled by a licensed professional engineer demonstrating that a fire apparatus (fire apparatus to be determined by the Fire Marshal) can negotiate the proposed horizontal inside radius, and

(b) Clearance of 3 feet shall be provided on the far front bumper radius and provide 2 feet of additional clearance for the inside rear wheel radius.

(c) The Inspection Authority retains the discretion to deny applications that meet the above Standards if there are other concerns that lead to the determination that these mitigations do not have the same overall practical effect as intended.

(d) Provided subsections (a) and (b) above are met to the satisfaction of the Inspection Authority, and that the Inspection Authority has not denied the application per subsection (c), the proposed design shall be construed as meeting the same overall practical effect as meeting this standard and shall be considered an approved road exception.

VERTICAL CURVES: The length of vertical curves in roadways, exclusive of gutters, ditches, and drainage structures designed to hold or divert water shall not be less than 100 feet. A vertical curve less than 100 feet in length may be approved provided the following:

(a) The vertical curve is designed by a licensed professional engineer demonstrating that a fully loaded fire apparatus (fire apparatus to be determined by the Fire Marshal) can negotiate the sag and crown with a minimum clearance of 4 inches.

(b) The Inspection Authority retains the discretion to deny applications that meet the above Standards if there are other concerns that lead to the determination that these mitigations do not have the same overall practical effect as intended.

(c) Provided subsection (a) above is met to the satisfaction of the Inspection Authority, and that the Inspection Authority has not denied the application per subsection (b), the proposed design shall be construed as meeting the same overall practical effect as meeting this standard and shall be considered an approved road exception.

ROADWAY TURNAROUNDS: Turnarounds are required on driveways over 300 feet in length , on dead-end roads, shall be within 50 feet of the building, and shall be unobstructed at all times. Turnarounds shall have a maximum longitudinal slope no greater than eight (8) percent and the cross slope perpendicular to the longitudinal slope shall not exceed five (5) percent. Longitudinal

slope is defined as the slope corresponding to the long axis of a fire apparatus as it travels into, out of, and through a turnaround. The slope shall be maintained beginning and ending at the point of tangency of the edge of the curves for the turnaround. The minimum turning radius for a turnaround shall be 40 feet (Detail C-12). If a hammerhead is used, the top of the hammerhead shall be a minimum of 60 feet in length (Detail C-13). An alternative to the hammerhead turnaround is the shunt turnaround (Detail C-14). A turnaround other than those listed above can be designed and proposed for review to the County Engineer and Fire Marshal for possible acceptance of use.

ROADWAY TURNOUTS: Turnouts shall be a minimum of 22 feet wide and 30 feet long with a minimum 25 foot taper on each end. Turnouts shall be spaced a maximum of 400 feet apart. Where multiple turnouts are required, they shall be inter-visible to satisfy spacing requirements unless allowed by the County Engineer or approving body. See Detail C-11.

ROADWAY STRUCTURES:

(a) All driveway, road, and private lane roadway structures shall be designed and maintained to support at least 75,000 pounds and provide the minimum vertical clearance of 13 feet, 6 inches. For guidance, refer to Section 1411.7 of Chapter 7, Division 2, Title 21 of the California Code of Regulations for axle weight distribution;

(b) Appropriate signing including, but not limited to, weight or vertical clearance limitations, one-way road or single traffic lane conditions, shall reflect the capability of each bridge;

(c) Where a bridge or an elevated surface is part of a fire apparatus access road, the bridge shall be constructed and maintained in accordance with the current edition of the American Association of State and Highway Transportation Officials (AASHTO) Load-and-Resistance Factor Design (LRFD) Bridge Design Specifications. Existing, older bridges may be maintained and rehabilitated in accordance with the AASHTO Standard Specifications for Highway Bridges, 17th Edition, published 2002 (known as AASHTO HB-17) hereby incorporated by reference. Bridges and elevated surfaces shall be designed for a live load sufficient to carry the imposed loads of fire apparatus. Vehicle load limits shall be posted at both entrances to bridges when required by Napa County.

(d) Where elevated surfaces designed for emergency vehicle use are adjacent to surfaces which are not designed for such use, barriers, or signs, or both, as approved by Napa County, shall be installed and maintained.

(e) A bridge with only one traffic lane may be authorized by Napa County; however, the bridge shall have unobstructed visibility from one end to the other and turnouts at both ends.

ONE-WAY ROADS: All one-way roads shall be constructed with a minimum of one 12-foot travel lane, and have a minimum of 14-feet of horizontal clearance. Shoulder requirements shall apply per Detail C-6. All one-way roads shall connect to a two-lane roadway at both ends, and shall provide access to an area zoned for no more than 10 dwelling units. In no case shall a one-way road exceed 2,640 feet in length. A turnout shall be placed and constructed at approximately the midpoint of each one-way road.

DEAD-END ROADS:

(a) The maximum length of a dead-end road, or system of roads which are served by a single point of vehicular ingress/egress, shall not exceed the following cumulative lengths, regardless of the number of parcels served:

Parcels zoned for less than one acre	800 feet
Parcels zoned for 1 acre to 4.99 acres	1,320 feet
Parcels zoned for 5 acres to 19.99 acres	2,640 feet
Parcels zoned for 20 acres or larger	5,280 feet

All lengths shall be measured from the edge of the roadway surface at the intersection that provides the single point of vehicular ingress/egress, to the end of the road surface at its farthest point. Where a dead-end road crosses areas of differing zoned parcel sizes requiring different length limits, the shortest allowable length shall apply.

(b) Where parcels are zoned 5 acres or larger, turnarounds shall be provided at a maximum of 1,320 foot intervals.

(c) Each dead-end road shall have a turnaround constructed at its terminus.

AGRICULTURAL ROADS: Agricultural roads shall be constructed to provide 14 feet of travel way and unobstructed vertical clearance of 13 feet, 6 inches along its entire length. The travel way shall, at a minimum, consist of a 10 foot wide all weather surfaced travel lane with 4 feet of drivable shoulder (see Detail C-10). The drivable shoulder may be placed on both sides of the travel lane with the total shoulder width summing to 4 feet. For agricultural roads between 150 and 800 feet in length, a standard inter-visible turnout shall be provided near the midpoint of the roadway as approved by the County Engineer. Where agricultural roads exceed 800 feet in length, standard inter-visible turnouts shall be provided no more than 400 feet apart (see Detail C-11).

RESIDENTIAL DRIVEWAYS: Residential driveways shall be constructed to provide 14 feet of travel way and unobstructed vertical clearance of 13 feet, 6 inches along its entire length. The travel way shall, at a minimum, consist of a 10 foot wide all weather surfaced travel lane with 4 feet of drivable shoulder (see Detail C-10). The drivable shoulder may be placed on both sides of the travel lane with the total shoulder width summing to 4 feet. Residential driveways between 150 and 800 feet in length shall have a standard inter-visible turnout near the midpoint of the driveway as approved by the County Engineer. Where residential driveways exceed 800 feet in length, standard inter-visible turnouts shall be provided no more than 400 feet apart (see Detail C-11).

There are two types of Residential Driveways defined below:

Rural Area – A residential driveway connected to a rural County road per Detail P-2.

Urban Area – A residential driveway connected to a County road with curb, gutter and sidewalk improvements, and has a driveway approach per Detail P-3.

Construction triggering application of these Standards as defined in Section 2, that are served by an existing common drive and/or residential driveway that does not meet current width

requirements, respectively, may improve existing access with turnouts, spaced as shown in Table 15.1, and minimum horizontal clearances are achieved to comply with the roadway width design criteria on a project by project basis. Residential projects that fully comply with the turnout spacing requirements listed in Table 15.1 for existing residential driveways and residential common driveways shall be considered as meeting the same overall practical effect as meeting these Standards for residential driveway and residential common driveway width. The determination of compliance with the turnout spacing in Table 15.1 shall be made by the Fire Marshal and the County Engineer.

Table 15.1

Turnout Spacing on Existing Residential Driveways

	Number of Residential Units* Served by Existing Driveway					
Level of Improvement	*6+*	*5*	*4*	*3*	*2*	*1*
Improvement increases enclosed Group R area by 50% or more.	300 ft	300 ft	300 ft	400 ft	400 ft	400 ft
2nd Dwelling Unit	300 ft	300 ft	300 ft	400 ft	400 ft	400 ft
Primary Residence	250 ft	250 ft	300 ft	400 ft	400 ft	400 ft
Primary Residence with a 2nd Dwelling Unit	200 ft	200 ft	250 ft	300 ft	400 ft	400 ft

*Residential units do not include guest cottages.

While turnouts spaced at the above noted distances would be ideal, the Fire Marshal and the County Engineer will work with the developer to space turnouts per site conditions. The standard number of turnouts required shall be determined by dividing the total length of the driveway by the applicable spacing in the above table and rounding up to a whole number. The number of turnouts may be reduced through an Exception to the Standards, as defined in Section 3. The intent of requiring turnouts noted above is to improve an otherwise non-compliant residential driveway or common drive to the maximum extent practicable through individual development with the goal of ultimately achieving a driveway that is compliant with the Standards for its entire length.

DESIGN CRITERIA CHART

Street	Min. Design Speed (mph)	Min. Centerline Radius (ft)	Min. Stopping Sight Distance (ft)	Max. Grade (percent)
Arterial	40	825	275	8
Collector	35	585	225	10
General Minor	20	220	150	16
Loop Road and Non Continuous Minor	20	120	110	16
Cul-de-Sac	20	120	110	16
One Way Loop road	20	50[6]	110	16[5]
Common Drives	15	50[6]	75	16[5]
Residential Driveway	15	50[6]	75	16[5]
Agricultural Road	15	50[6]	75	16[5]

[5] Roadway grade may exceed 16 percent, not to exceed 20 percent, provided the provisions of this section are met.

[6] Minimum horizontal inside radius.

16. INDUSTRIAL AND COMMERCIAL DEVELOPMENT

Industrial references in these Standards are applicable to all appropriately zoned lands.

Road cross sections for existing County roads and State highways which have full improvement widths different from these Standards shall be improved to provide additional pavement width and thickness plus additional right of way, all as determined by the County Engineer.

Structural pavement sections shall be based upon a minimum traffic index of 6.0 and appropriate "R" value.

Bus turnouts and related sidewalks may be required as a condition of development.

Where on-street parking is allowed, a sidewalk shall be provided on the same side of the street as the parking lane. The sidewalk shall be Portland cement concrete. Where no sidewalk is required, an unpaved, clear walkway shall be provided.

Where off-street loading and service facilities are required; those facilities shall meet the provisions outlined in Napa County Code Chapter 18.110.060.

Consistent with the Board policy of accepting into the road system only those roads improved to County Standards, any new roads or drainage improvements proposed under a parcel map or final map to be accepted for maintenance by the County or by a County Service Area shall first be improved to full improvement in accordance with the Standards.

In any land divisions where road and drainage improvements are proposed to be privately maintained, the developer shall furnish covenants calling for maintenance of such improvements. Covenants shall run with the land and be recorded with the final map or parcel map.

17. TRAFFIC CONTROL DEVICES

The California Manual on Uniform Traffic Control Devices, the Caltrans Standard Specs and the Caltrans Highway Design manual shall be utilized to determine traffic warrants, design and construction procedures for all traffic control devices with the exception of left-turn lanes. Warrants for construction of a left-turn lane on County maintained roads as defined in Sections 18.112.040 through 18.112.080 of the County Code shall be as follows:

Left-Turn Lane Warrants: Use Permits or modifications thereof shall trigger the application of the following warrants to determine the necessity for a left-turn lane for the proposed use.

(a) Application of the following Left-Turn Lane Warrant Graph based on road average daily traffic (ADT) and the projected ADT of the proposed use. The chart is a representation of probable conflict between turning traffic and advancing traffic. Private Road or Driveway ADT is

the total average daily traffic utilizing the facility. A left-turn lane will not be considered for uses generating an ADT of 10 or less.

(b) If the corner sight distance in advancing direction, measured from the driveway, is less than required per Caltrans design standards (usually the posted speed limit multiplied by 11, read in feet) a left-turn lane shall be installed.

(c) If traffic conditions or turning movements pose a considerable threat to public safety, as determined by the Director of Public Works, a left-turn lane shall be installed.

Design: Design of the left-turn lane shall be prepared by a Licensed Civil Engineer and be based on the County Standard Detail LTL-1, available at the PBES Department. Installation of a left-turn lane on a County public road shall require an encroachment permit issued by the Department of Public Works and the property owner shall be required to enter into a one year maintenance agreement including appropriate bonding. Installation of a left-turn lane on a State highway requires an encroachment permit issued by Caltrans.

Left Turn Lane Warrant Graph

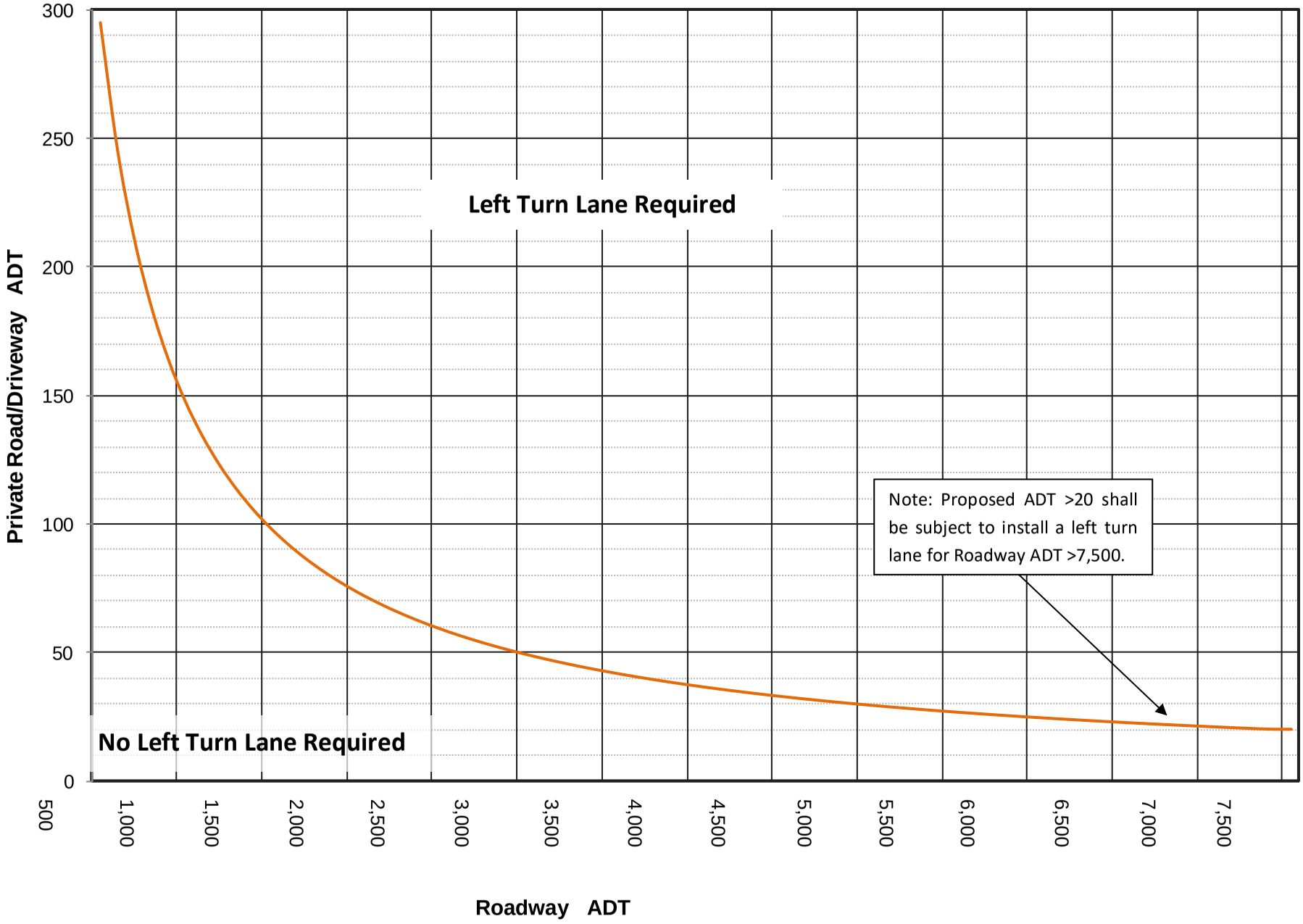

18. TYPICAL CROSS SECTIONS

The cross sections which follow are intended to represent typical applications in land development and do not include all possibilities or elements of design that may be required or permitted. The minimum right of way for any public street or road will not be less than 40 feet. In addition, slope easements extending 10 feet beyond the top of cut or toe of fill will be required whenever the vertical height of the cut or fill exceeds 5 feet. Easements are not required when cut or fill slopes are flatter than 3:1.

Please note that for simplification, mountable curb is not shown on the typical sections. When it is used, the sidewalks must be located as shown on the Standard Details.

Fill slopes higher than 10 feet will be protected with asphalt concrete dikes or other acceptable means. Super-elevations and continuous cross slope streets without a crown may be permitted and encouraged in specific cases upon the approval of the County Engineer.

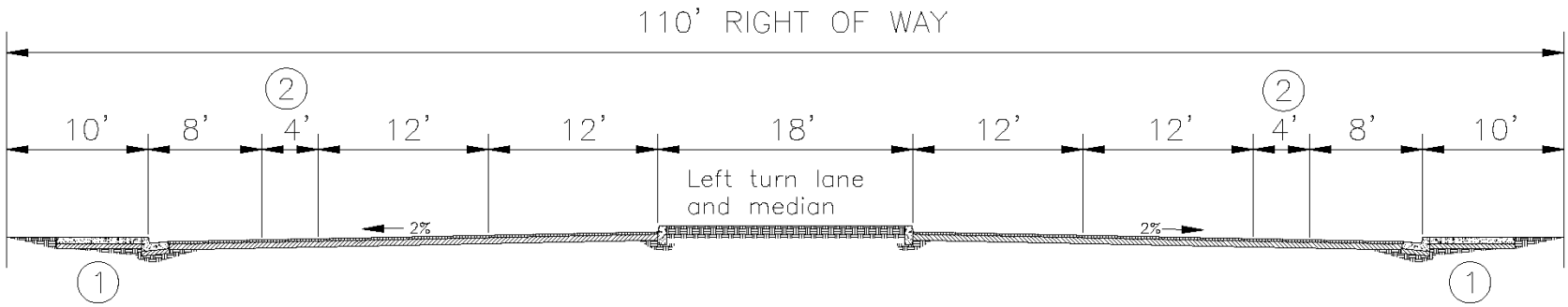

4 LANE ARTERIAL WITH MEDIAN

1. 10' P.C.C. SIDEWALK IN COMMERCIAL AREAS. 6' P.C.C. SIDEWALK IN RESIDENTIAL AREAS.
2. BIKE LANE

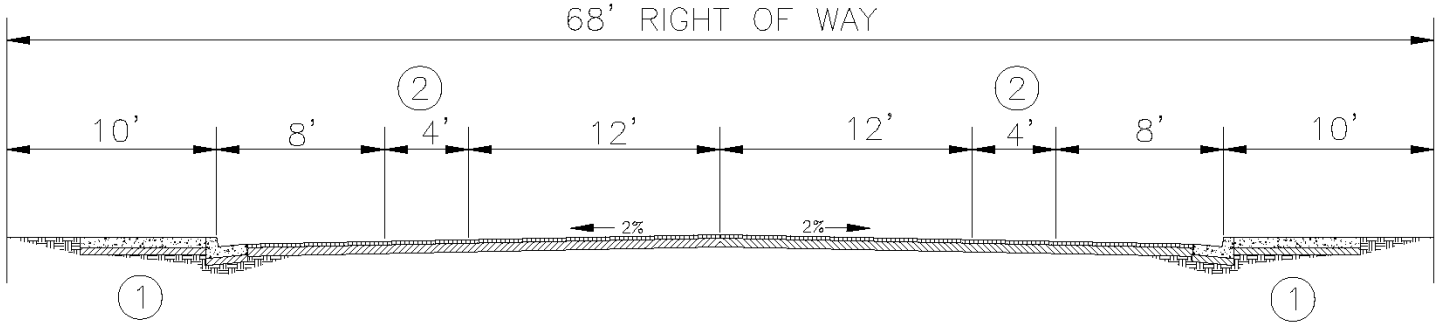

2 LANE ARTERIAL WITH PARKING

1. 6' P.C.C. SIDEWALK.
2. BIKE LANE.

NOT TO SCALE

ARTERIAL CROSS SECTIONS	DESIGN SPEED – 40 M.P.H. A.D.T. 5,000 OR MORE VEHICLES PER DAY
COUNTY OF NAPA DEPARTMENT OF PBES	DATE: JUNE 2016

ENGINEERING MANAGER RCE 57273

DETAIL C-1

DETAIL C-2

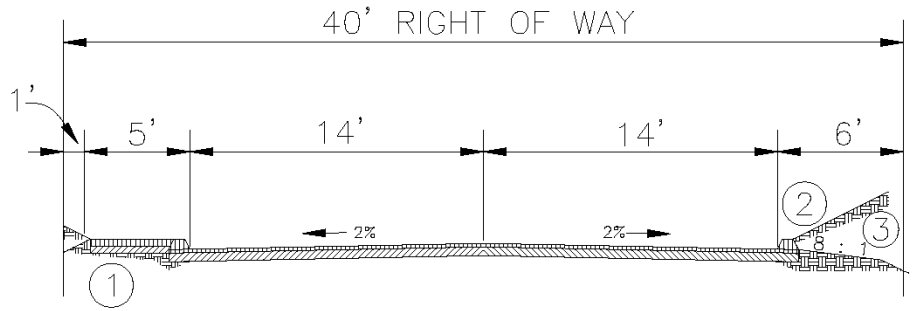

2 LANE ARTERIAL WITHOUT
PARALLEL PARKING LANES

1. 4' A.C SIDEWALK ON FILL SIDE.
2. A.C. DIKE IN CUT AREAS. BERM REQUIRED WHERE FILL HEIGHT EXCEEDS 10 FEET.
3. 4' SHOULDER IN FILL AREA.

NOT TO SCALE

ARTERIAL CROSS SECTIONS	DESIGN SPEED – 40 M.P.H. A.D.T. 5,000 OR MORE VEHICLES PER DAY	
COUNTY OF NAPA DEPARTMENT OF PBES	DATE: JUNE 2016	ENGINEERING MANAGER RCE 57273

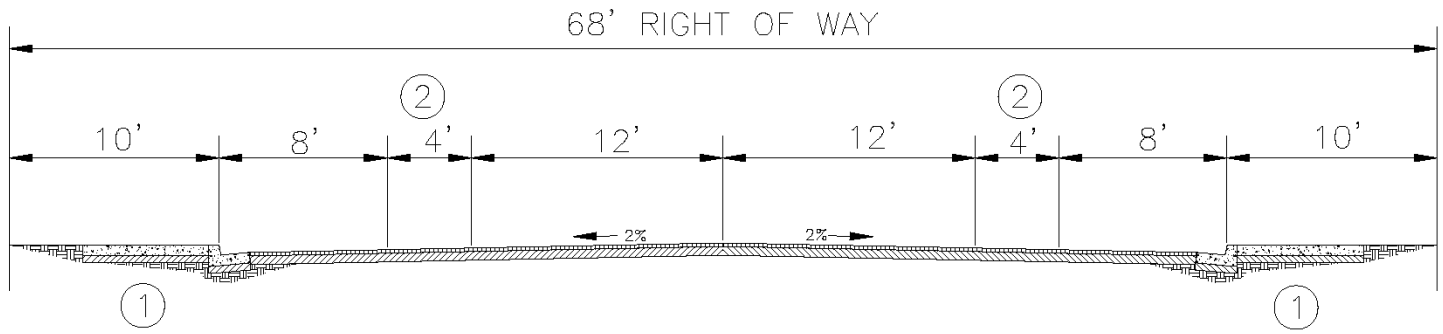

COLLECTOR WITH PARALLEL PARKING LANES

1. 5' P.C.C. SIDEWALK.
2. BIKE LANE.

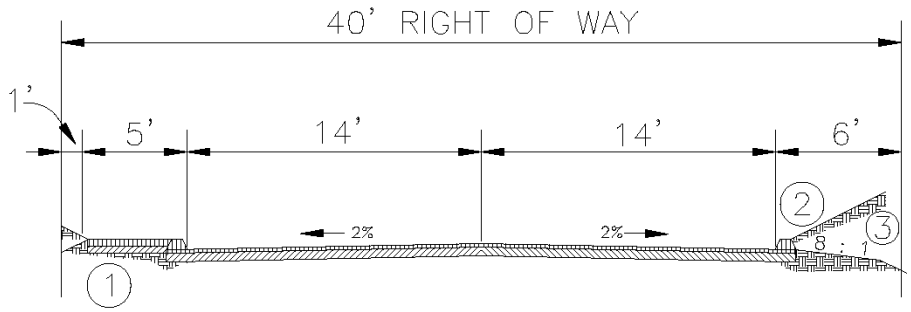

COLLECTOR WITHOUT PARALLEL PARKING LANES

1. 4' A.C SIDEWALK ON FILL SIDE.
2. A.C. DIKE IN CUT AREA. BERM REQUIRED WHERE FILL HEIGHT EXCEEDS 10 FEET.
3. 4' SHOULDER IN FILL AREA.

NOT TO SCALE

COLLECTOR CROSS SECTIONS	DESIGN SPEED – 35 M.P.H. A.D.T. 1,000 TO 5,000 VEHICLES PER DAY	
COUNTY OF NAPA DEPARTMENT OF PBES	DATE: JUNE 2016	ENGINEERING MANAGER RCE 57273

DETAIL C-3

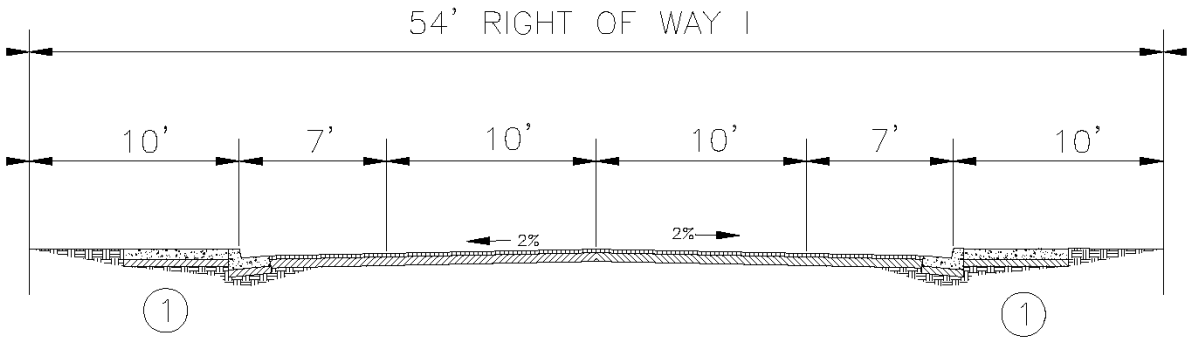

GENERAL MINOR WITH PARALLEL
PARALLEL PARKING LANES

1. 5' P.C.C. SIDEWALK.

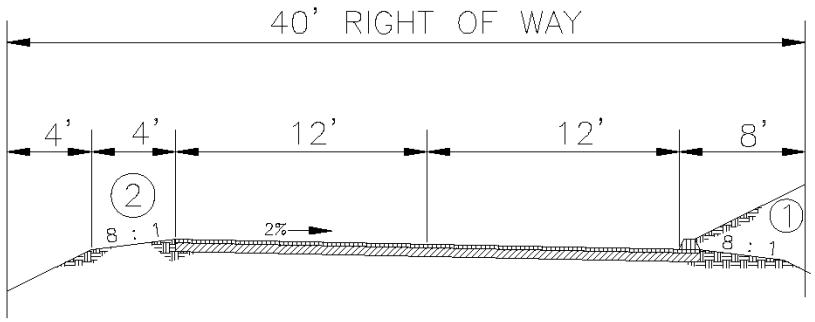

GENERAL MINOR WITHOUT PARALLEL
PARALLEL PARKING LANES

1. A.C. DIKE IN CUT AREAS. BERM REQUIRED WHERE FILL HEIGHT EXCEEDS 10 FEET.
2. 4' SHOULDER IN FILL AREAS.

NOT TO SCALE

GENERAL MINOR CROSS SECTIONS	DESIGN SPEED – 25 M.P.H. A.D.T. UP TO 1,000 VEHICLES PER DAY
COUNTY OF NAPA DEPARTMENT OF PBES	DATE: JUNE 2016

ENGINEERING MANAGER RCE 57273

DETAIL C-4

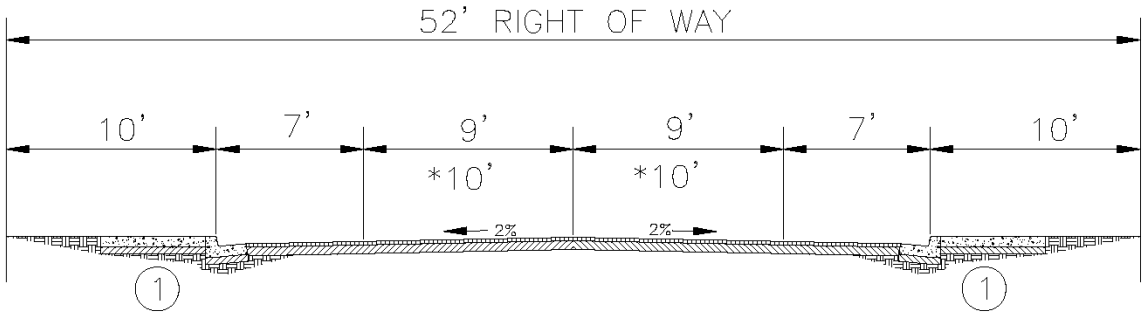

WITH PARALLEL PARKING LANES

MINIMUM CUL-DE-SAC RADIUS IS 40' TO FACE OF CURB.

1. 5' P.C.C. SIDEWALK.

*NOTE: INCREASE DRIVING LANE WIDTH TO 10' WHEN LENGTH EXCEEDS 1,000' & EMERGENCY ACCESS IS NOT PROVIDED.

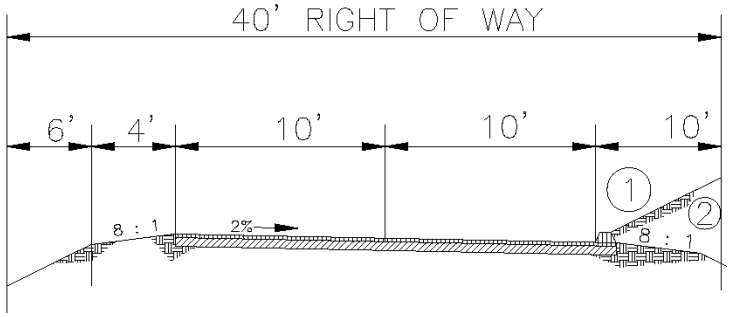

WITHOUT PARALLEL PARKING LANES

MINIMUM CUL-DE-SAC RADIUS IS 40' TO EDGE OF PAVEMENT.

1. A.C. DIKE IN CUT AREAS. BERM REQUIRED WHERE FILL HEIGHT EXCEEDS 10 FEET.
2. 4' SHOULDER IN FILL AREAS.

NOT TO SCALE

NON-CONTINUING MINOR, LOOP ROAD & CUL-DE-SAC	DESIGN SPEED - 20 M.P.H. A.D.T. UP TO 250 VEHICLES PER DAY	
COUNTY OF NAPA DEPARTMENT OF PBES	DATE: JUNE 2016	ENGINEERING MANAGER RCE 57273

DETAIL C-5

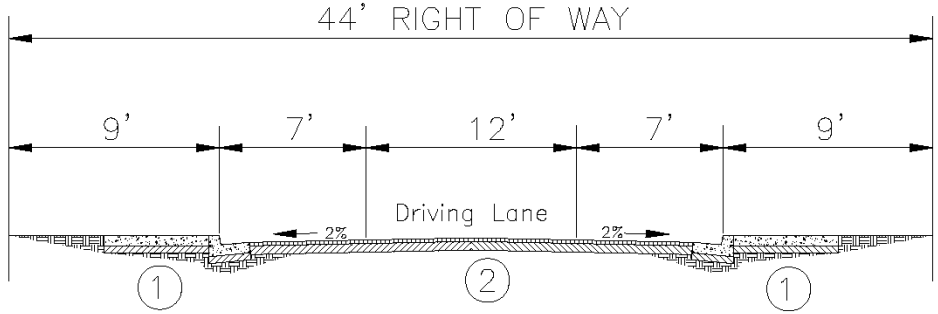

ONE WAY LOOP ROAD WITH PARALLEL PARKING LANES

1. 5' P.C.C. SIDEWALK.
2. PARKING LANES MUST BE DELINEATED.

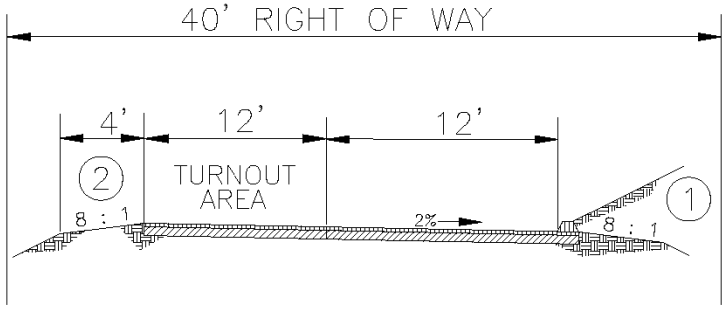

ONE WAY LOOP ROAD WITHOUT PARALLEL PARKING LANES

1. A.C. DIKE IN CUT AREAS. BERM REQUIRED WHERE FILL HEIGHT EXCEEDS 10'.
2. 4' SHOULDER IN FILL AREAS FOR PUBLIC ROADS AND AS REQUIRED BY COUNTY ENGINEER FOR PRIVATE ROADS AND DRIVEWAYS.

NOTE: INCREASE PAVEMENT WIDTH TO 18' WHEN STOPPING SIGHT DISTANCE IS LESS THAN 220'.

NOT TO SCALE

ONE WAY LOOP CROSS SECTIONS	DESIGN SPEED – 20 M.P.H. A.D.T. UP TO 100 VEHICLES PER DAY	
COUNTY OF NAPA DEPARTMENT OF PBES	DATE: APRIL 2016	ENGINEERING MANAGER RCE 57273

DETAIL C-6

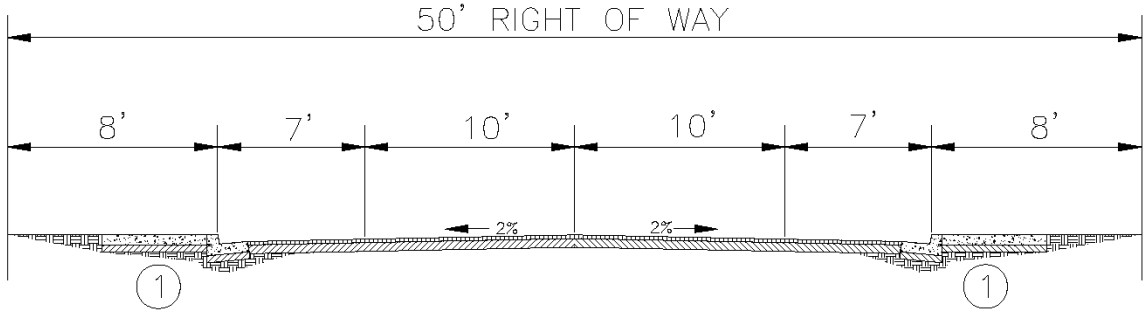

COMMON DRIVE WITH PARALLEL PARKING LANES

1. 5' P.C.C. SIDEWALK FOR TYPE I OR 4' P.C.C. SIDEWALK FOR TYPE II

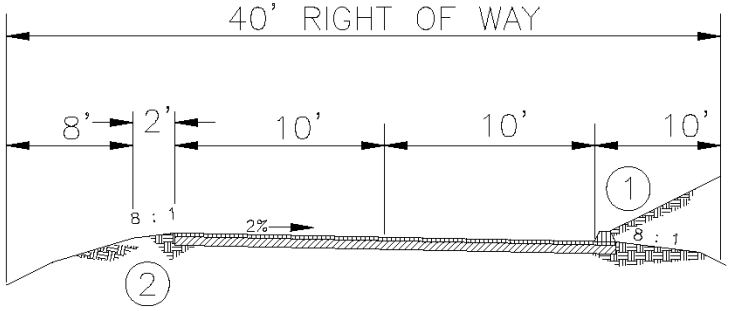

COMMON DRIVE WITHOUT PARALLEL PARKING LANES

1. A.C. DIKE IN CUT AREAS. BERM REQUIRED WHERE FILL HEIGHT EXCEEDS 10 FEET.
2. 2' OF ADDITIONAL HORIZONTAL CLEARANCE CAN BE LOCATED ON ONE SIDE OR SPLIT BETWEEN BOTH SIDES.

NOT TO SCALE

COMMON DRIVE CROSS SECTIONS	DESIGN SPEED – 15 M.P.H. SERVES UP TO 6 DWELLING UNITS	
COUNTY OF NAPA DEPARTMENT OF PBES	DATE: APRIL 2016	ENGINEERING MANAGER RCE 57273

DETAIL C-7

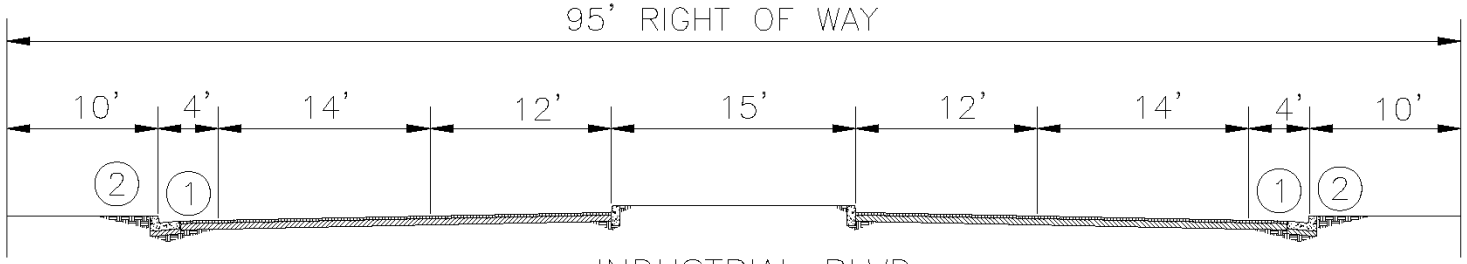

INDUSTRIAL BLVD.

1. BIKE LANE AND EMERGENCY PARKING.

2. NO PRIVATE DRIVEWAY CONNECTIONS.

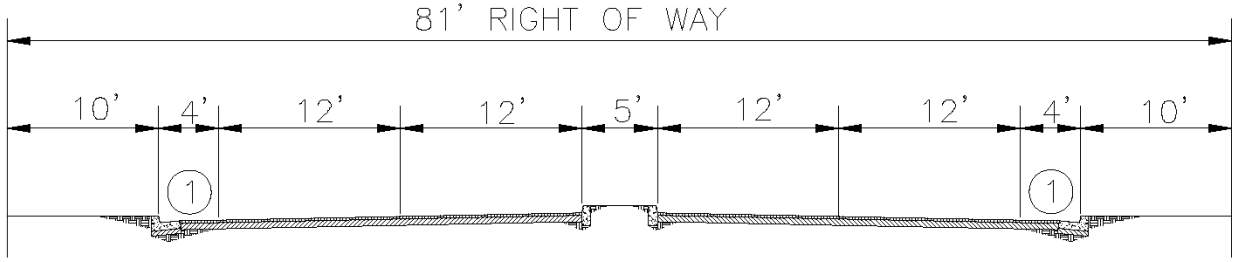

INDUSTRIAL 4 LANE COLLECTOR

1. BIKE LANE AND EMERGENCY PARKING.

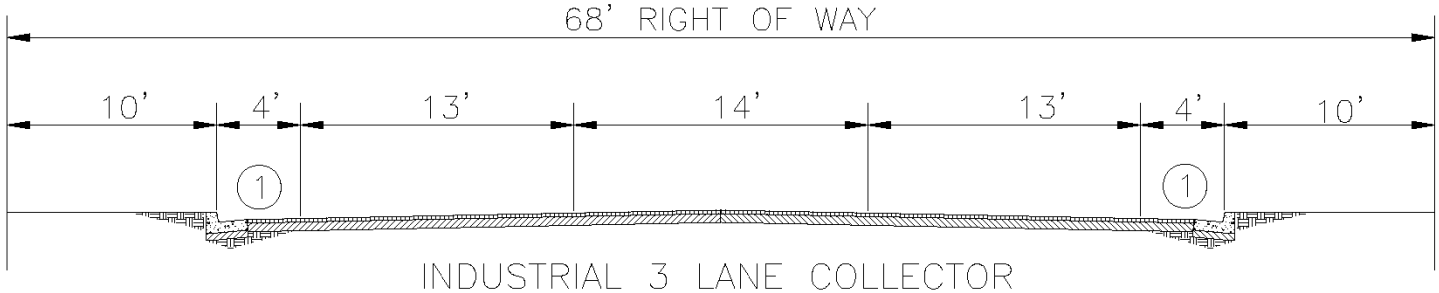

INDUSTRIAL 3 LANE COLLECTOR

1. BIKE LANE AND EMERGENCY PARKING.

NOT TO SCALE

INDUSTRIAL COLLECTORS

COUNTY OF NAPA DEPARTMENT OF PBES	DATE: JUNE 2016	ENGINEERING MANAGER RCE 57273

DETAIL C-8

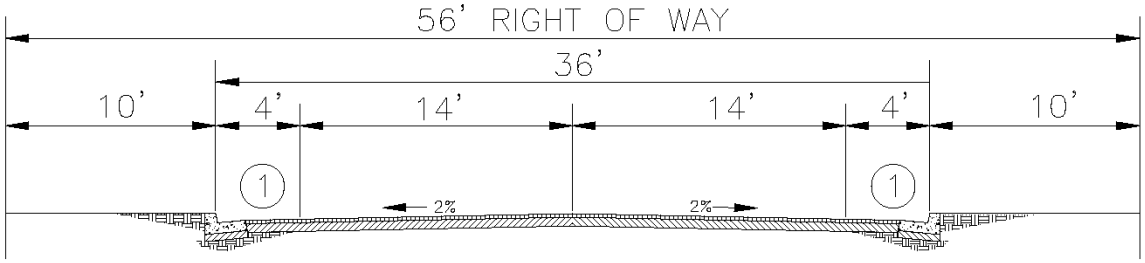

INDUSTRIAL 2 LANE COLLECTOR

1. BIKE LANE AND EMERGENCY PARKING.

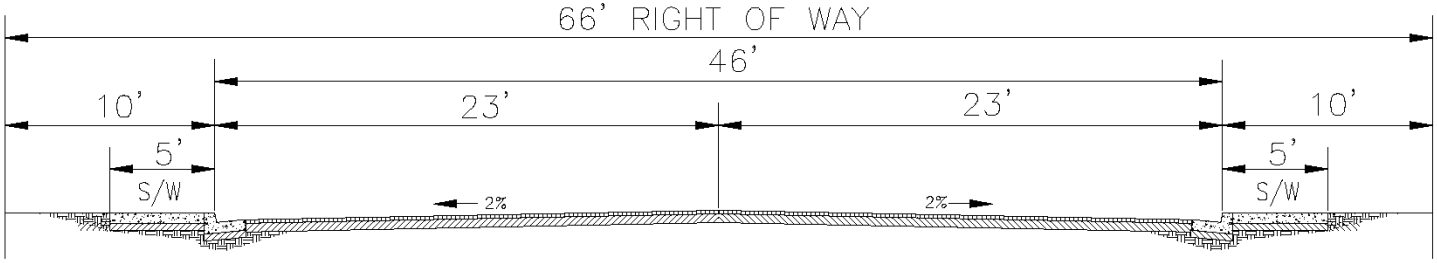

INDUSTRIAL MINOR
(ON-STREET PARKING)

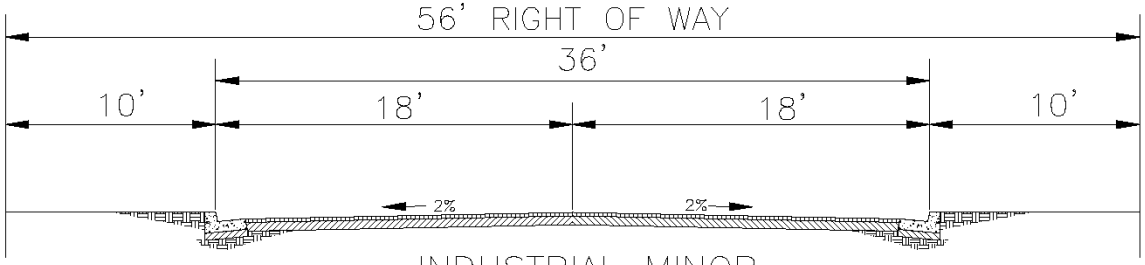

INDUSTRIAL MINOR
(NO PARKING)

NOT TO SCALE

INDUSTRIAL COLLECTOR AND INDUSTRIAL MINOR

COUNTY OF NAPA DEPARTMENT OF PBES	DATE: JUNE 2016	ENGINEERING MANAGER RCE 57273

DETAIL C-9

① PRIVATE ACCESS EASEMENT SHALL BE OF SUFFICIENT WIDTH TO ACCOMMODATE ALL NECESSARY IMPROVEMENTS TO ACHIEVE THE STANDARD DRIVEWAY WIDTH AND SHALL NOT BE LESS THAN 25 FEET.

② ASPHALT BERM REQUIRED WHEN FILL HEIGHT EXCEEDS 10 FEET OR IN CUT AREAS.

③ A DRIVEABLE SWALE MAY BE USED AS PART OF TRAVEL LANE WHEN APPROVED BY COUNTY ENGINEER AND CAL FIRE.

④ CROSS SLOPE SHALL BE PROVIDED TO PREVENT WATER PONDING IN TRAVEL WAY AND SHALL NOT EXCEED 5%.

⑤ DRIVABLE SHOULDER SHALL BE CONSTRUCTED OF 5" CL. 2 AB MINIMUM.

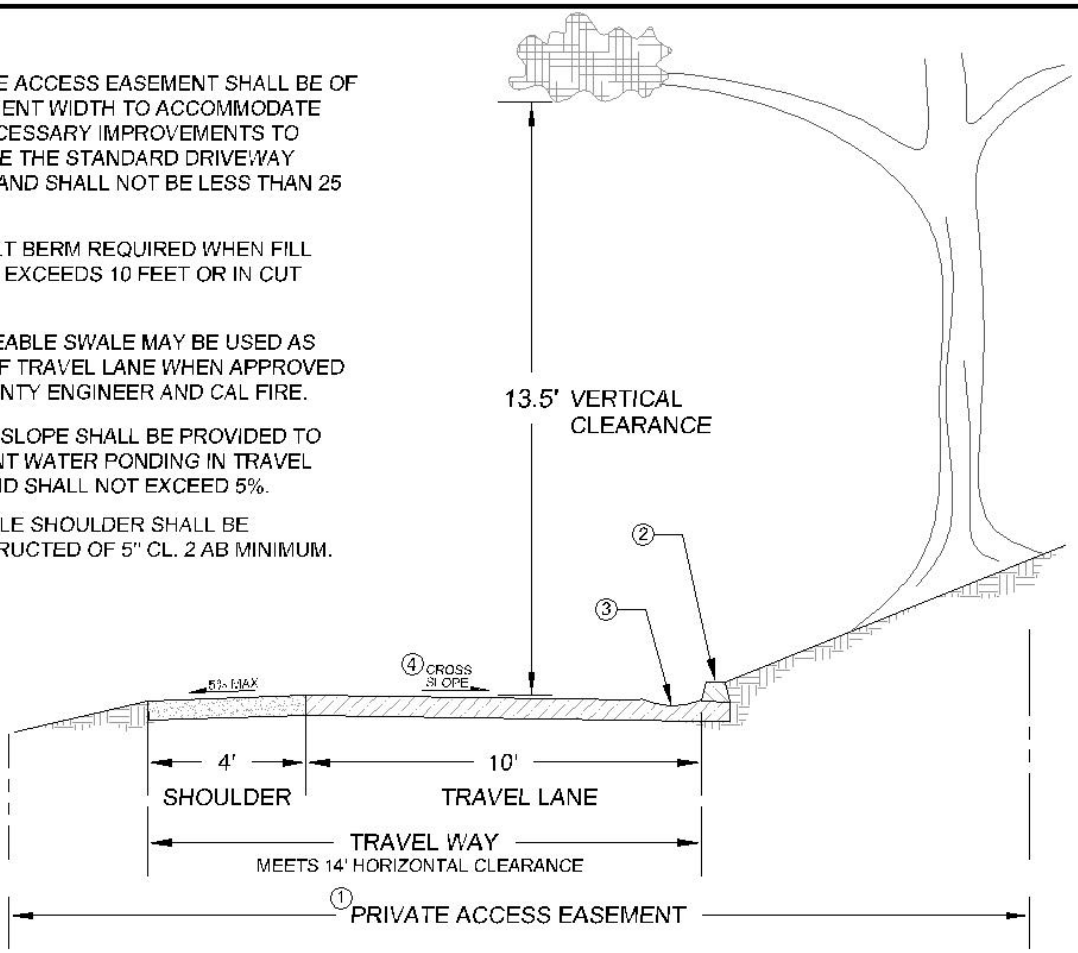

NOTES:

1. SEE SECTION 15 OF THESE STANDARDS FOR DESIGN CRITERIA.

2. ROAD SURFACING REAUIREMENTS FOR TRAVEL LANE (APPLIES TO RESIDENTIAL DRIVEWAYS AND AGRICULTURAL ROADS):

TRAVEL LANE ALL WEATHER SURFACE OPTIONS	RANGE OF ℄ GRADE FOR SURFACE OPTION
5" CL. 2 AB	0% - 5% (MAX)
5" CL. 2 AB WITH DOUBLE SEAL COAT	0% - 16% (MAX)
2" HMA / 5" CL. 2 AB	0% - <18% (MAX)
3" HMA / 5" CL. 2 AB	0% - 20% (MAX)

3. SEE THE FOLLOWING DETAILS FOR DESIGN OF DRIVEWAY APPURTENANCES:

> CONNECTION TO COUNTY ROAD - DETAIL P-2 (RURAL) OR DETAIL P-3 (URBAN)

> STANDARD DRIVEWAY TURNOUT - DETAIL C-11

> STANDARD DRIVEWAY TURNAROUND - DETAIL C -12, C -13 OR C -14

4. PROVIDE REFLECTOR TYPE ADDRESS NUMBER PLACARDS IN ACCORDANCE WITH ARTICLE 3 OF THE LATEST VERSION OF THE CBOF STATE RESPONSIBILITY AREA FIRE SAFE REGULATIONS.

NOT TO SCALE

COUNTY OF NAPA
DEPARTMENT OF PBES

RESIDENTIAL DRIVEWAY OR AGRICULTURAL ROAD

JANUARY 2020

DETAIL C-10

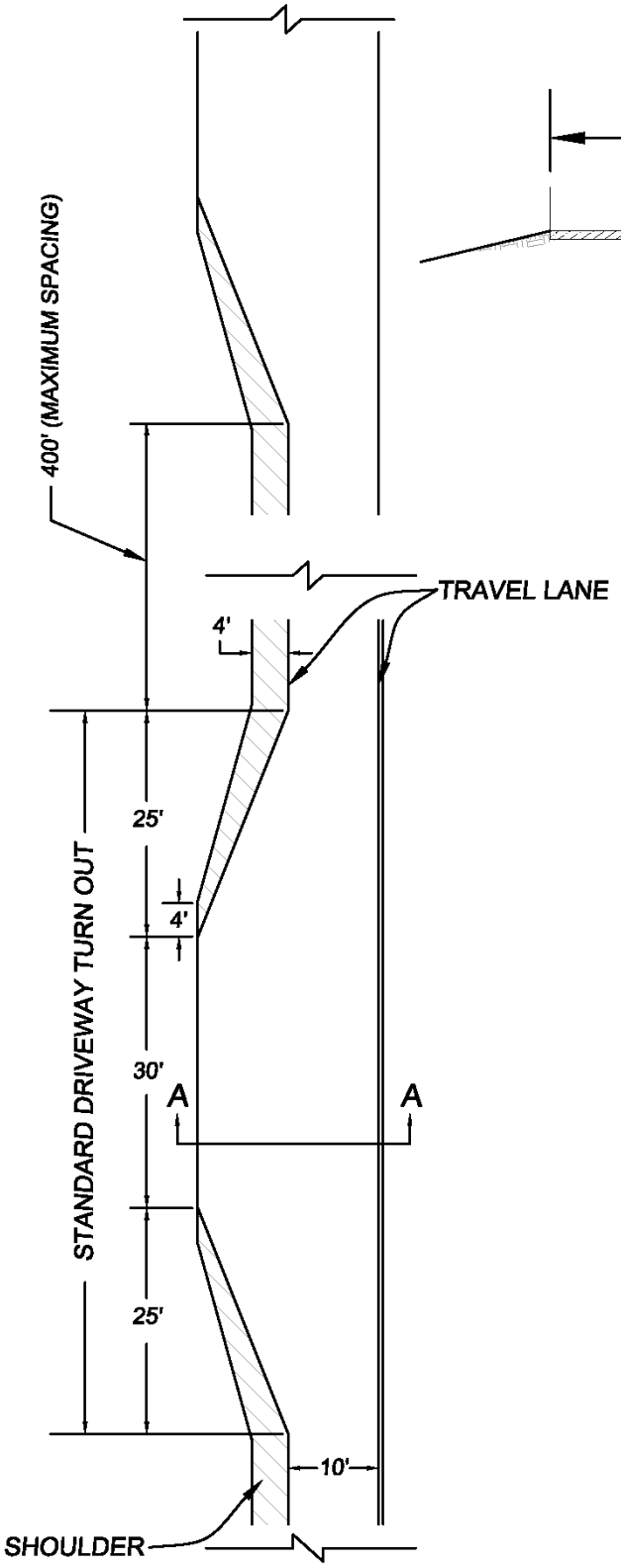

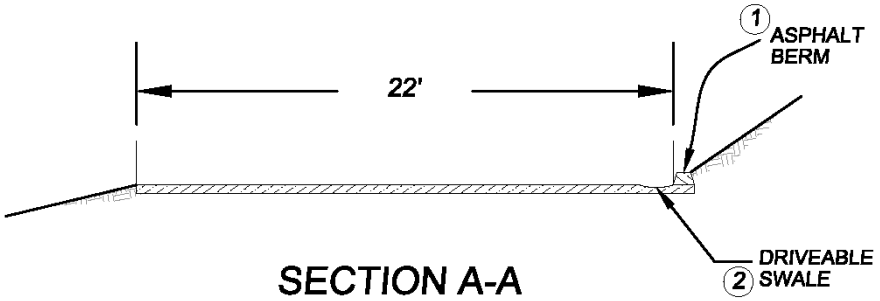

SECTION A-A

NOTES:

1. TURNOUTS SHALL BE SPACED A MAXIMUM OF 400-FT APART.

2. MULTIPLE TURNOUTS MUST BE INTER-VISABLE TO SATISFY SPACING REQUIREMENTS UNLESS ALLOWED BY COUNTY ENGINEER AND FIRE MARSHAL.

(1) BERM REQUIRED WHEN FILL HEIGHT EXCEEDS 10 FEET OR IN CUT AREAS.

(2) A DRIVEABLE SWALE MAY BE USED AS PART OF TRAVEL LANE WHEN APPROVED BY COUNTY ENGINEER AND FIRE MARSHAL.

NOT TO SCALE

COUNTY OF NAPA
DEPT. OF PBES

STANDARD DRIVEWAY
TURN OUT

ENGINEERING MANAGER RCE 57273

APRIL 2016

DETAIL C-11

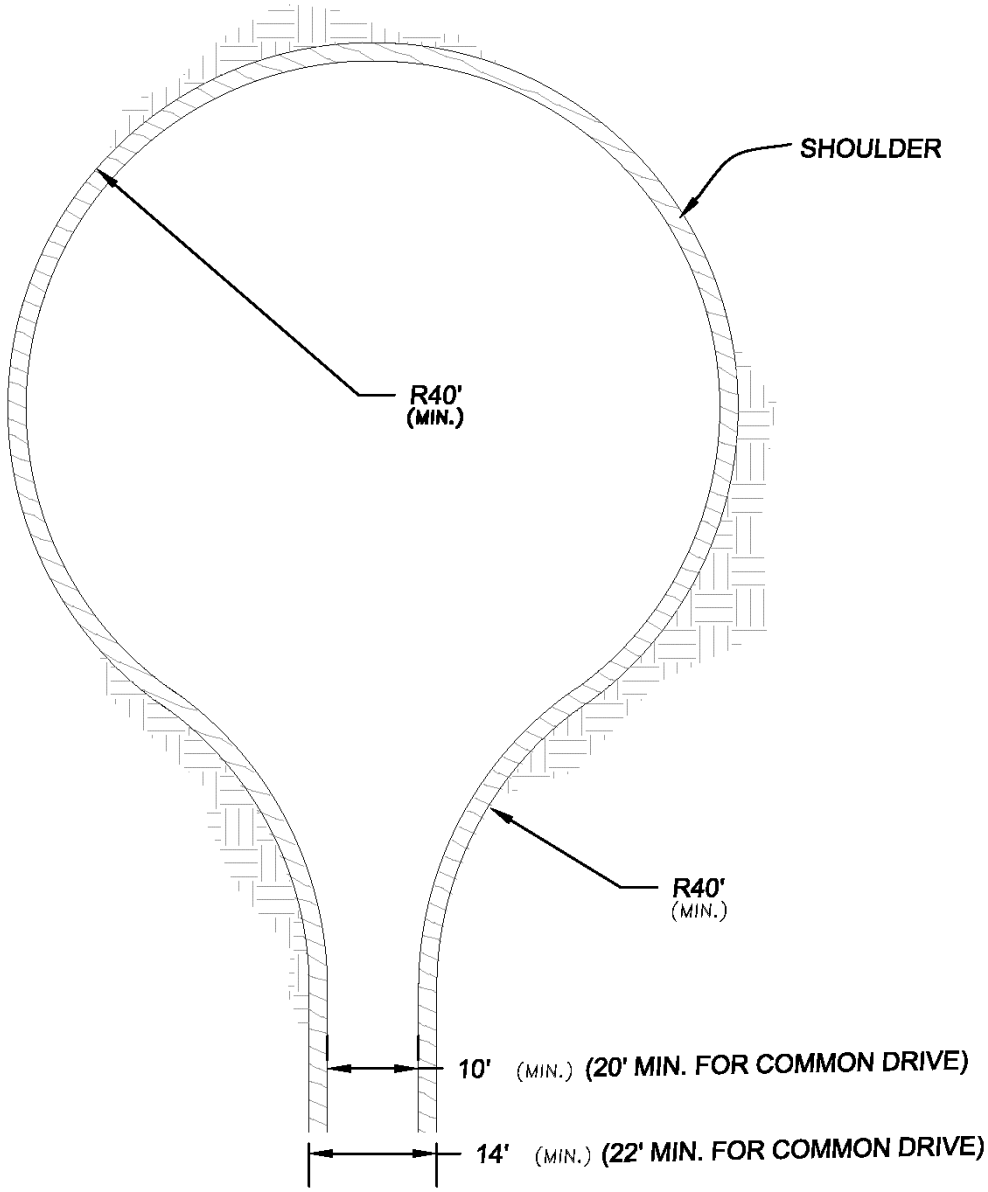

NOTES:

1. TURNAROUND FACILITIES SHALL BE PROVIDED WITHIN 50 FEET OF BUILDING FOR FIRE ENGINES.

2. DOES NOT INCLUDE ON STREET PARKING.

NOT TO SCALE

COUNTY OF NAPA
DEPARTMENT OF PBES

STANDARD BULB
TURNAROUND

ENGINEERING MANAGER RCE 57273

APRIL 2016

DETAIL C-12

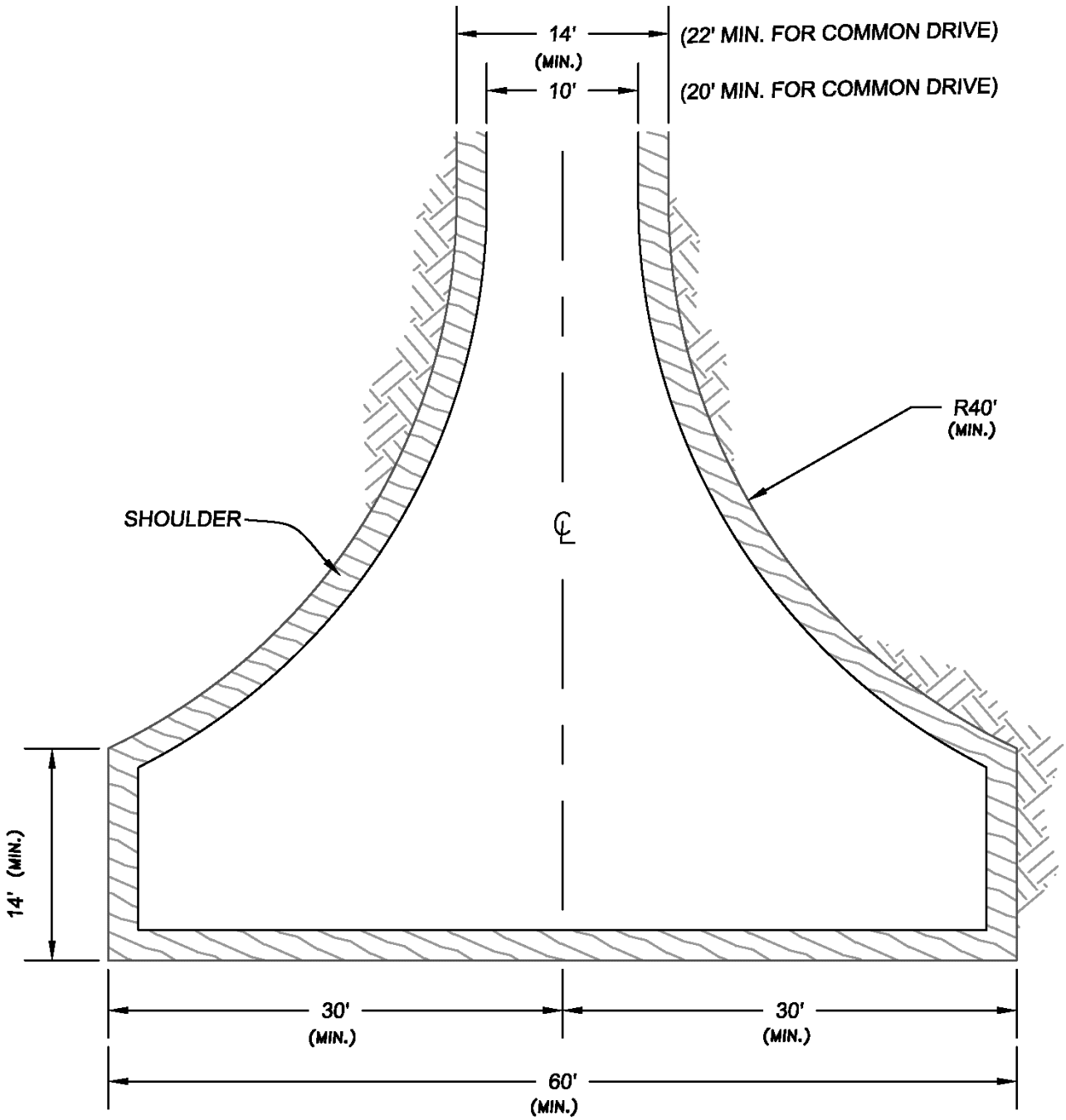

NOTES:
1. TURNAROUND FACILITIES SHALL BE PROVIDED WITHIN 50 FEET OF BUILDING FOR FIRE ENGINES.

NOT TO SCALE

COUNTY OF NAPA
DEPARTMENT OF PBES

STANDARD HAMMERHEAD TURNAROUND

ENGINEERING MANAGER RCE 57273

APRIL 2016

DETAIL C-13

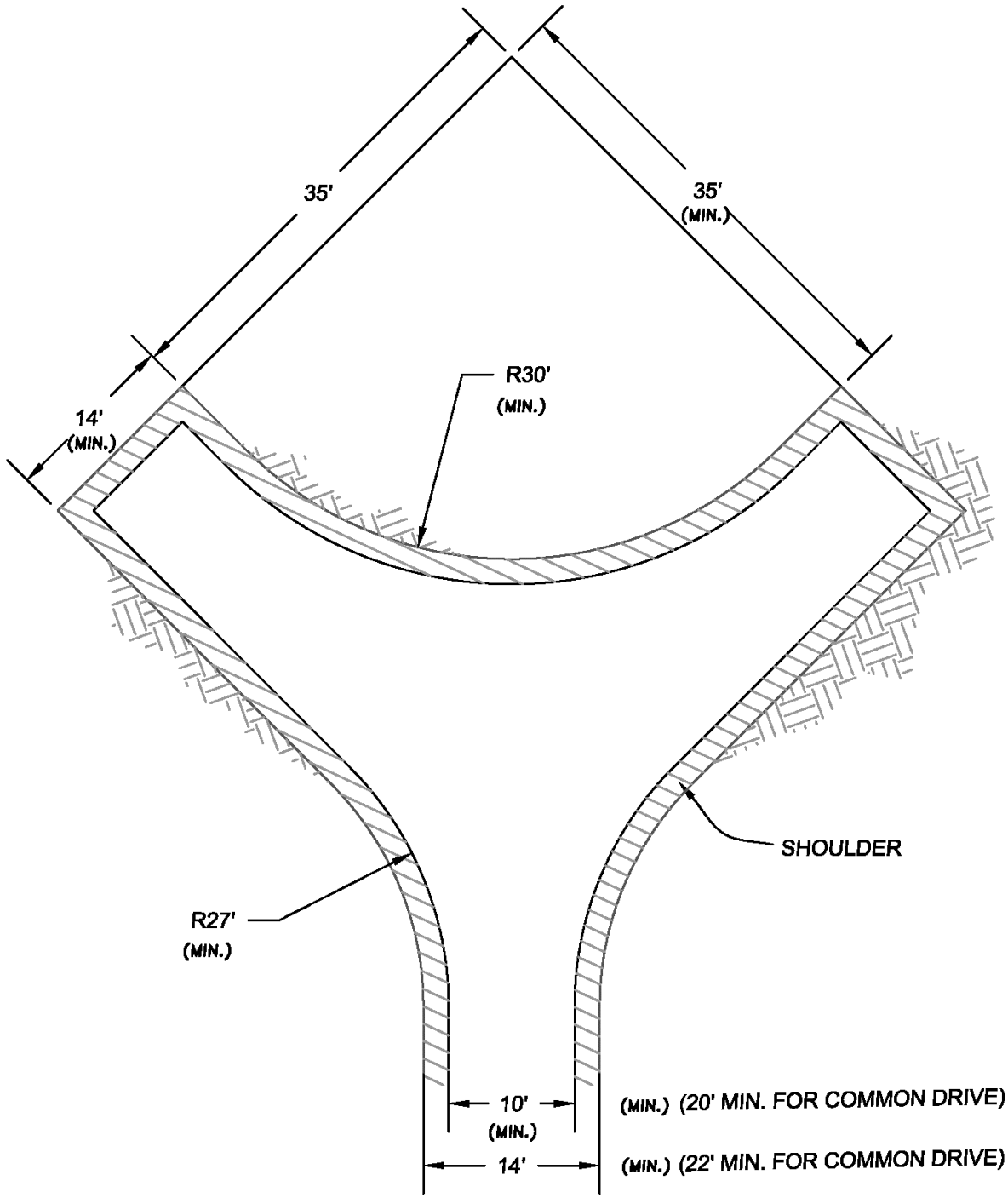

NOTES:
1. TURNAROUND FACILITIES SHALL BE PROVIDED WITHIN 50 FEET OF BUILDING FOR FIRE ENGINES.

NOT TO SCALE

COUNTY OF NAPA
DEPARTMENT OF PBES

RESIDENTIAL DRIVEWAY
SHUNT TURNAROUND

ENGINEERING MANAGER RCE 57273

APRIL 2016

DETAIL C-14

19. DETERMINATION OF TRAFFIC VOLUMES

Traffic volumes for new streets or roads will be computed on the basis that each single family dwelling unit generates an average of 10 trips per day. The developer's engineer is required to submit a traffic analysis showing the calculated traffic volumes for all new streets or roads and the estimated pattern of traffic flow plus any other data that could have a bearing on the proper street classification. This report shall be submitted with the project application to enable an early determination of the street and road system to be used. The traffic analysis shall include existing and projected 10 year truck traffic volumes. Traffic index adjustments of anticipated truck trips are not included in Figure 1. Adjustments to the traffic index shall be made to account for the truck traffic.

The report will be reviewed by the County Engineer using estimated traffic flow patterns based on the layout of each development and normal driver behavior, and the street classifications will be determined. Planned unit developments and other types that may have unique traffic characteristics will be investigated on an individual basis.

20. DETERMINATION OF STRUCTURAL SECTION

Pavement design will be based on Caltrans design procedures using the traffic index and the resistance value as the design variables. Traffic index values will be developed by the County Engineer based on Figure 1 which shows the relationship between the number of houses served and the traffic index.

Resistance values will be furnished by the developer and will be based on soil tests taken at proposed sub-grade at intervals of 500 feet and/or where there is a definite change in the soil conditions. The lowest resistance value will be used for design unless it can be shown that the material is substantially different than that used in the other tests. In heavy clay soils, expansive conditions may be encountered that will require special attention. The use of soil stabilization to increase the resistance value may be allowed in certain instances upon approval of the County Engineer. The accompanying chart (Figure 2) gives the minimum values of surfacing and base and the total section thickness for various traffic indices. Seal coat pavements may be used on minor roads if the structural section is adequate for the Traffic index and soil conditions.

The minimum pavement section shall be 2 inches of HMA and 5 inches of Class 2 AB or a structural equivalent. Residential driveways and agricultural roads in the rural area shall meet surfacing requirements per Detail C-10. Common driveways in rural areas may utilize surfacing requirements outlined in C-10 with prior approval from the County Engineer and Fire Marshal. The pavement structural section shall be constructed in accordance with Section 27 of these Standards.

CHART FOR ESTIMATION OF TRAFFIC INDEX
USING A HOUSE COUNT

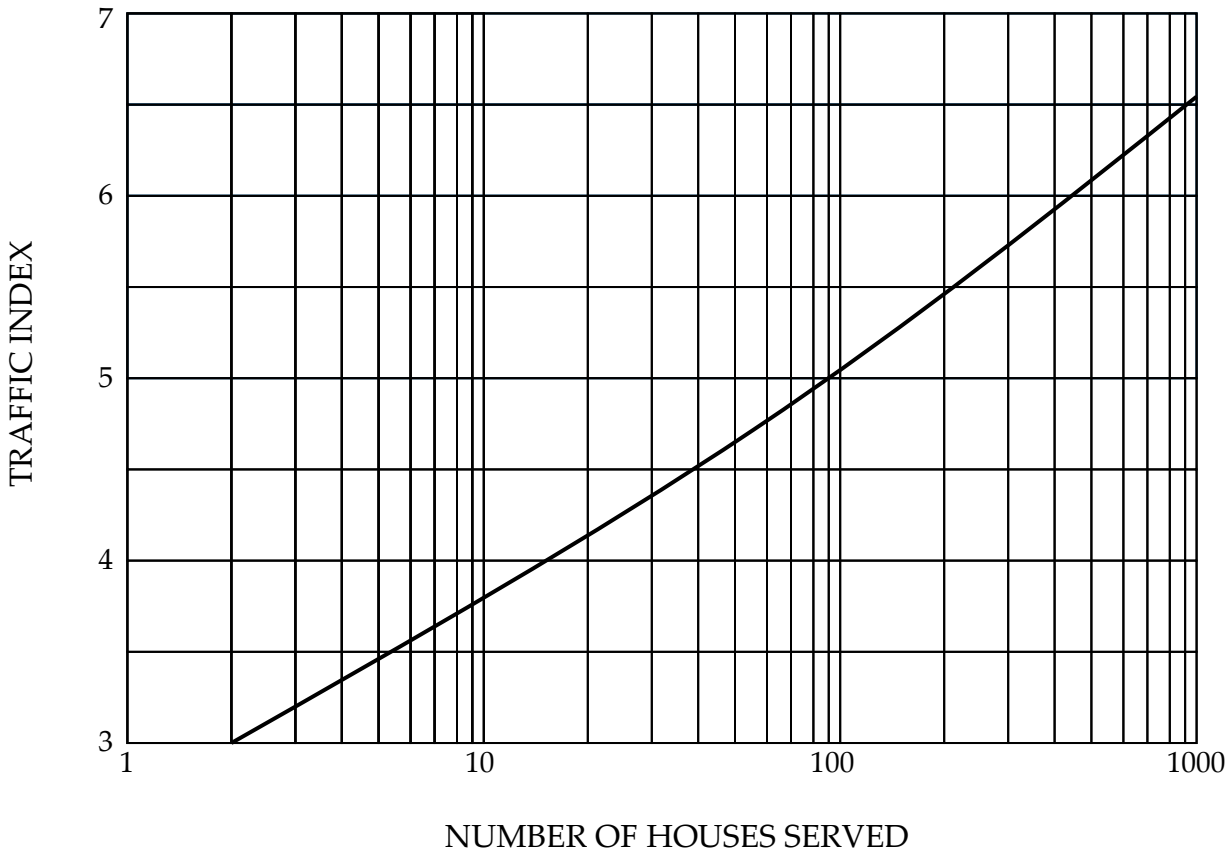

Notes: For use only within subdivisions for residential and residential collector streets.

Chart is based on a 10 – year design life.

Figure 1

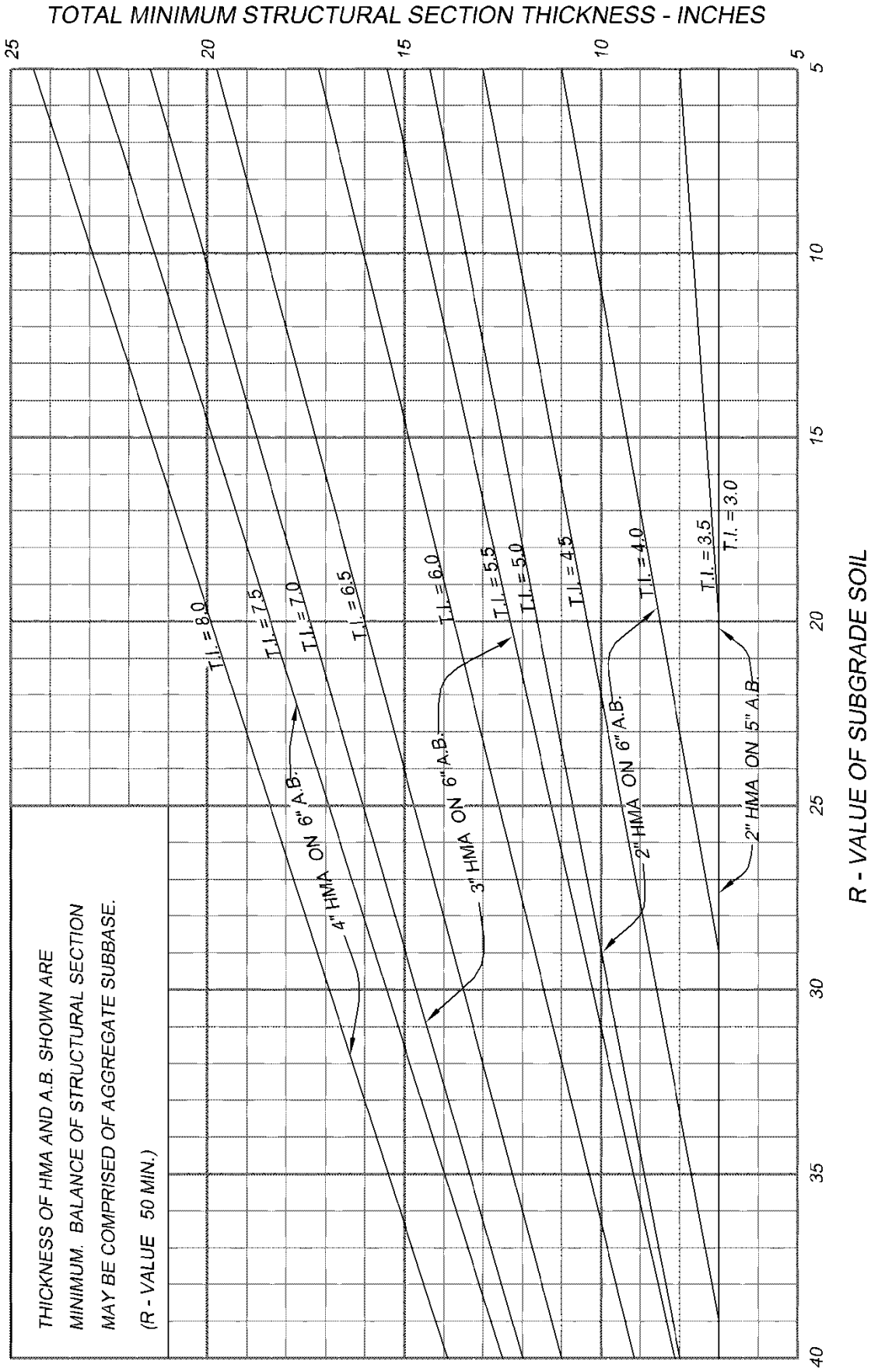
TOTAL MINIMUM STRUCTURAL SECTION THICKNESS - INCHES
25
20
15
10
5
5
10
15
20
25
30
35
40
R - VALUE OF SUBGRADE SOIL
T.I. = 8.0
T.I. = 7.5
T.I. = 7.0
T.I. = 6.5
T.I. = 6.0
T.I. = 5.5
T.I. = 5.0
T.I. = 4.5
T.I. = 4.0
T.I. = 3.5
T.I. = 3.0
4" HMA ON 6" A.B.
3" HMA ON 6" A.B.
2" HMA ON 6" A.B.
2" HMA ON 5" A.B.
THICKNESS OF HMA AND A.B. SHOWN ARE
MINIMUM. BALANCE OF STRUCTURAL SECTION
MAY BE COMPRISED OF AGGREGATE SUBBASE.
(R - VALUE 50 MIN.)

FIGURE 2

21. GRADING REQUIREMENTS AND SOILS INVESTIGATIONS (FOR ROADS)

Geologic investigations will be required on developments of 40 acres or more in size to determine safe cut and fill slopes and unusual soils situations, and may be required on smaller parcels if considered necessary by the County Engineer. In the absence of soils tests, all cut and fill slopes shall be flatter than 2:1; flatter slopes to conform to the existing terrain are encouraged. Slope rounding at the top of cuts and toe of fills is required under all conditions. In addition, all cut and fill slopes except in rock shall be seeded with durable, hardy species of grass or other acceptable plants or grasses that do not require irrigation. Geologic reports and soil investigations will conform to criteria set by the County Engineer.

22. DRAINAGE REQUIREMENTS

General:

The purpose of drainage improvements is to provide protection from flooding and reduce or eliminate maintenance costs and erosion damage. Erosion is particularly troublesome in sloped areas and whatever steps deemed necessary will be taken to reduce erosion and its attendant problems. The paved roadbed shall be used wherever possible to carry runoff, and the typical sections may be modified to accomplish this. Concentrated runoff shall not be discharged onto native ground under any circumstances.

(a) Minimum Pipe Size: 18 inches in diameter or equivalent

(b) Material: Metal, concrete or high density polyethylene plastic (up to 36 inch diameter, corrugated outer wall and smooth inner liner) pipes are suitable for culverts; concrete shall generally be used for comprehensive drainage systems. Cast-in-place concrete pipe is not allowed in the County right of way. Concrete pipe shall be Class III minimum. When metal pipes are used, they shall be asphalt coated and dipped or sufficient data shall be submitted to substantiate a 50 year service life in accordance with California Test Method No. 643.B. Culverts 24 inches in diameter or less with four feet or less of cover to flow line may be designed for a 25 year service life.

(c) Erosion Protection: (see subsection (i) also) All culverts shall have flared end sections or concrete headwalls. Erosion protection shall be provided at all culvert outlets and at culvert inlets where abrupt changes in channel alignment are encountered. Typical erosion protection consists of keyed rock rip-rap surrounding sensitive areas. Erosion Protection measures shall be detailed and approved by the County Engineer. See Detail P-11 for a typical Drainline Outlet installation.

(d) Abrasion Protection: Paved inverts are required for metal pipe culverts when the velocity in the channel is five feet per second or more.

(e) Minimum Cover: The minimum cover over pipes installed within the road right of way shall be as required for pipe strength, loading conditions, and hydraulic requirements.

(f) Runoff computations: Figure 7-811.6 of the State Planning Manual, provided on Page 42 of this manual, is generally acceptable for computing runoff in rural areas. Additional field information and possible revised criteria should be developed for culverts or systems requiring 66 inch diameter or larger pipe. A tabular chart for each drainage basin incorporating elevation of the most remote point of the watershed above the point of concentration, length of the channel

from the most remote point to the point of concentration, intensity, area of the tributary basin, percentage of runoff, design discharge for 100 year and 10 year runoff {Q10 = (2/3) Q100} and velocities should be submitted with proposed improvement plans or made a part of the improvement plans. In rural areas, runoff factors can be determined by summing up the values shown on Figure 3. The minimum time of concentration shall be 10 minutes for any drainage basin. For developed areas or areas that have a potential for future development, Figure 3.1 will give runoff factors.

(g) Design Capacity: Culverts shall be designed to pass a 10 year runoff without head on the inlet under free outfall conditions, and a 100 year runoff with a head not higher than the nearest edge of the traveled way. Entrance capacity for the 10 year runoff will generally control culvert design. Comprehensive drainage systems shall be designed to carry a 10 year runoff without head and a 100 year runoff using the head available in the appurtenant structures. Figure 4 gives the critical capacities of the most common pipe sizes.

The following exceptions are allowed for Common Drives per Detail C-7:

i. In flood hazard areas as designated on the FIRM map, culverts shall be sized to the 10 year runoff without head and assuming no adjacent inundation. The minimum pipe size shall be 18 inch.
ii. In the remaining areas culverts shall either meet the requirements set forth in subsection (g) above, or pass a runoff equal to the capacity of the upstream channel, and together with the road being designed for this purpose, convey the 100 year runoff without damage to the road. The minimum pipe size shall be 18 inch.

(h) Curbs and Gutters: Curbs and gutters shall be designed to carry a 100 year runoff without overtopping the curb or the back of sidewalk. Generally, drainage water in gutters will not be allowed to travel more than 1,000 feet.

(i) Roadside Ditches: Roadside ditches, where allowed, shall be designed to carry ten year runoff with six inches of freeboard. The minimum slope shall be 0.25 percent and paving or rock-lining will be required when the velocity would cause erosion in an unpaved ditch. Roadside ditches generally will not be allowed in areas that are to be developed into lots unless the area is very remote and the lots are unusually large. Permissible velocities for unlined ditches and channels are given in Figure 5.

(j) Channels: Channels may be used in place of pipe when the required pipe size would be larger than 48 inches in diameter. Existing natural channels and creeks may remain unimproved in built up areas if the flow of water is continuous throughout the year and if the channel or creek is adequate to carry a 100 year runoff with 1 foot of freeboard or more and with minimal backflow effect. Existing inadequate creeks and channels shall be improved as required to obtain capacity to carry a 100 year runoff with 1 foot of freeboard within the boundaries of the area to be developed. The design of large channels shall also be reviewed and approved by the Napa County Flood Control and Water Conservation District.

Natural ravines and swales may remain undisturbed if it is determined that this would not create drainage or erosion problems.

(k) Bridges: Bridges shall be designed to pass a 100 year runoff with a minimum of 2 feet of freeboard. Streams which carry large floating debris may require greater freeboard at bridge sites. Abutments shall be protected from erosion damage which may necessitate use of rip-rap or other suitable material and methods. Abutments on fill material will not be allowed unless supported on piles and the fill is adequately protected from erosion. Piers in the waterway area shall have no opening. Bridges shall generally conform to standards and guidelines of the Caltrans.

(l) Outfall Requirements: Drainage water originating within or passing through a development shall be disposed of in a natural watercourse, which may require work outside of the development site. A watercourse is defined as: a running stream of water; a natural stream, including rivers, creeks, runs, and rivulets. There must be a stream usually flowing in a particular direction, though it need not flow continually. It may sometimes be dry. It must flow in a definite channel, having a bed, sides, or banks; it must be something more than a mere surface drainage over the entire face of a tract of land, occasioned by unusual freshets or other extraordinary causes. It does not include the water flowing in the hollows or ravines of land, which is the mere surface flow from rain and is discharged through them from a higher to a lower level, but which at other times are destitute of water. Such hollows or ravines are not watercourses.

Special attention must be given to drainage in sloped areas because of the potential for erosion damage and maintenance problems. Overbank storm drain outlets shall provide adequate slope protection and erosion control measures as directed by the County Engineer. Typical protection measures include placement of rock rip rap or a concrete pad to capture the culvert outfall drainage and discharge it safely at the base of the slope. See Detail P-11.

Miscellaneous Design Criteria: Loss of head through structures shall be calculated using standard engineering methods and equations. Roughness factors for use in design shall be as follows:

1.	Concrete pipe over 36 inch diameter	0.013
2.	Concrete pipe less than 36 inches	0.015
3.	Corrugated Metal Pipe	0.021
4.	CMP with paved invert	0.019
5.	Smooth walled HDPE Pipe	0.012

DESIGN DISCHARGE FOR SMALL BASINS

Example:

A culvert site in the Imperial Valley is 3 miles downstream and 900 ft. lower than the most remote point on the watershed. The tributary basin has an area of 2.0 square miles and average ratio of runoff to precipitation is estimated at 60 percent.

The line through H = 900 ft., L = 3 mi., G = Q, A = 2 sq. mi. and K = 60 intersects Q = 1700 second-feet the required design discharge.

[Incidentally, the flow results from a 41 minute storm of 2.2 inches per hour]

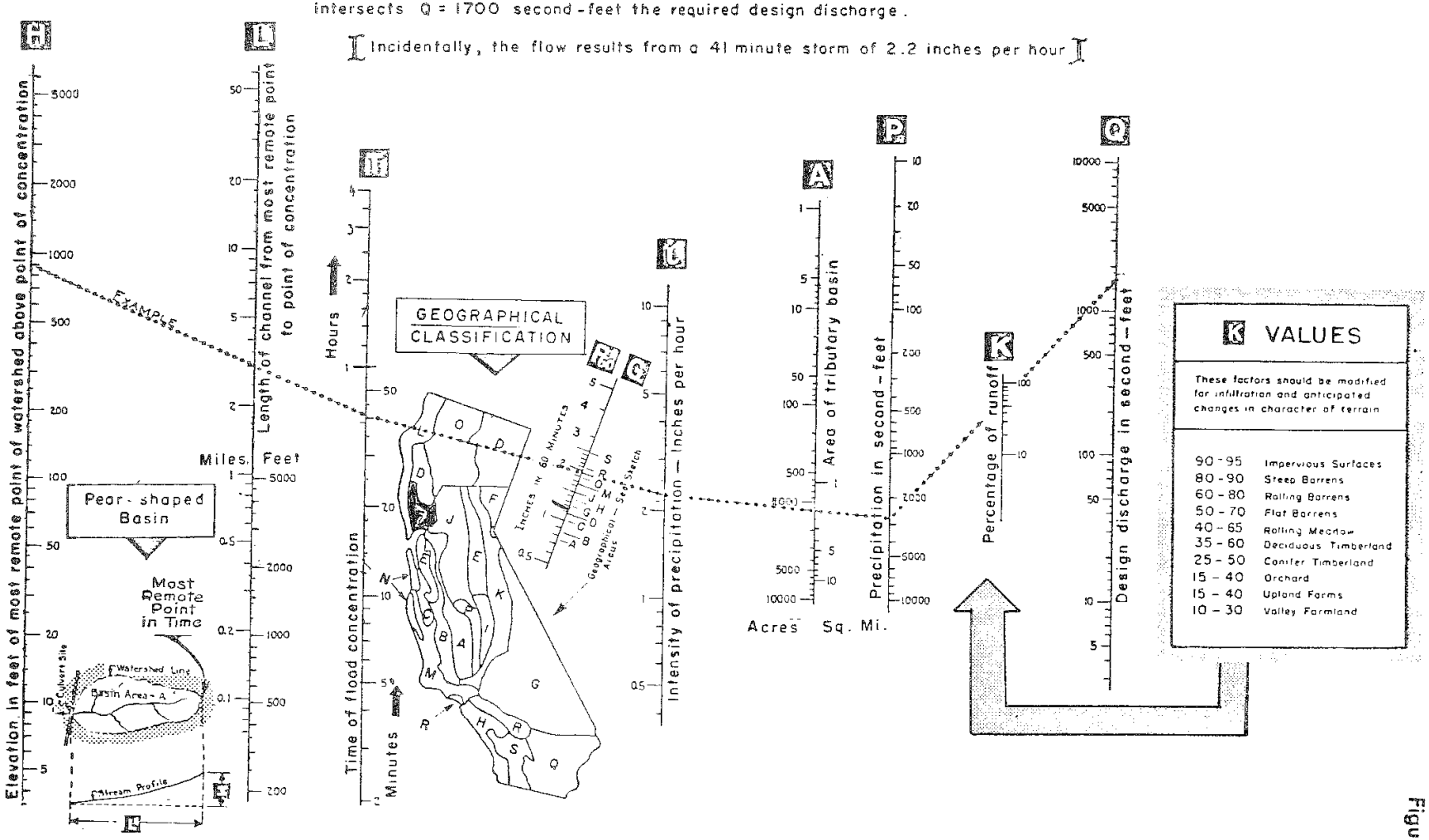

DESIGN DISCHARGE FOR SMALL BASINS

Figure 7-811.6
August, 1964

WATERSHED TYPES AND FACTORS

RUN-OFF PRODUCING CHARACTERISTICS OF WATERSHEDS SHOWING FACTORS FOR EACH CHARACTERISTIC FOR VARIOUS WATERSHED TYPES				
WATERSHED TYPES AND FACTORS				
Run-off Producing Features	**Extreme**	**High**	**Normal**	**Low**
Relief	**0.28 – 0.38** Steep, rugged terrain, with average slopes above 30%	**0.20 – 0.28** Rolling, with average slopes of 10 to 30%	**0.14 – 0.20** Rolling, with average slopes of 5 to 10%	**0.08 – 0.14** Relatively flat land, with average slopes of 0 to 5%
Soil Infiltration	**0.12 – 0.16** No effective soil cover either rock or thin soil mantle of negligible infiltration capacity.	**0.08 – 0.12** Slow to take up water; clay or shallow loam soils of low infiltration capacity imperfectly or poorly drained.	**0.06 – 0.08** Normal; well drained light and medium textured soils sandy loams, silt, and silt loams.	**0.04 – 0.06** Slow to take up water; clay or shallow loam soils of low infiltration capacity imperfectly or poorly drained.
Vegetation Cover	**0.12 – 0.16** No effective plant cover; bare or very sparse cover.	**0.08 – 0.12** Poor to fair; clean cultivation crops or poor natural cover; less than 20% of drainage area under good cover.	**0.06 – 0.08** Fair to good; about 50% of area in good grassland or woodland; not more than 50% of area in cultivated crops.	**0.04 – 0.06** Good to excellent; about 90% of drainage area in good grassland, woodland, or equivalent crop.
Surface	**0.10 – 0.12** Negligible; surface depressions, few and shallow; drainage ways steep and small; no marshes.	**0.08 – 0.10** Low well-defined system of small drainage ways; no ponds or marsh.	**0.06 – 0.08** Normal; considerable surface depression storage; lakes, ponds, and marshes.	**0.04 – 0.06** High; surface storage high; drainage system not sharply defined; large floodplain storage or large number of ponds or marshes.

THE RUNOFF FACTOR IS DETERMINED BY THE SUM OF THE FACTORS FOR RELIEF INFILTRATION, COVER, AND SURFACE. NOT APPLICABLE TO BUILT UP AREAS.

FIGURE 3

Runoff Coefficient for Developed Areas

Type of Development	**Coefficient**	
	Mild Slope	*Steep Slope*
Low Density Residential 1-3 Units/Acre	0.40	0.60
Medium Density Residential 4-9 Units/Acre	0.45	0.65
High Density Residential 10 or more Units/Acre	0.60	0.75
Limited Industrial	0.60	0.80
Industrial	0.75	0.90
Commercial	0.80	0.90
Schools	0.45	0.65
Parks	0.25	0.50

FIGURE 3.1

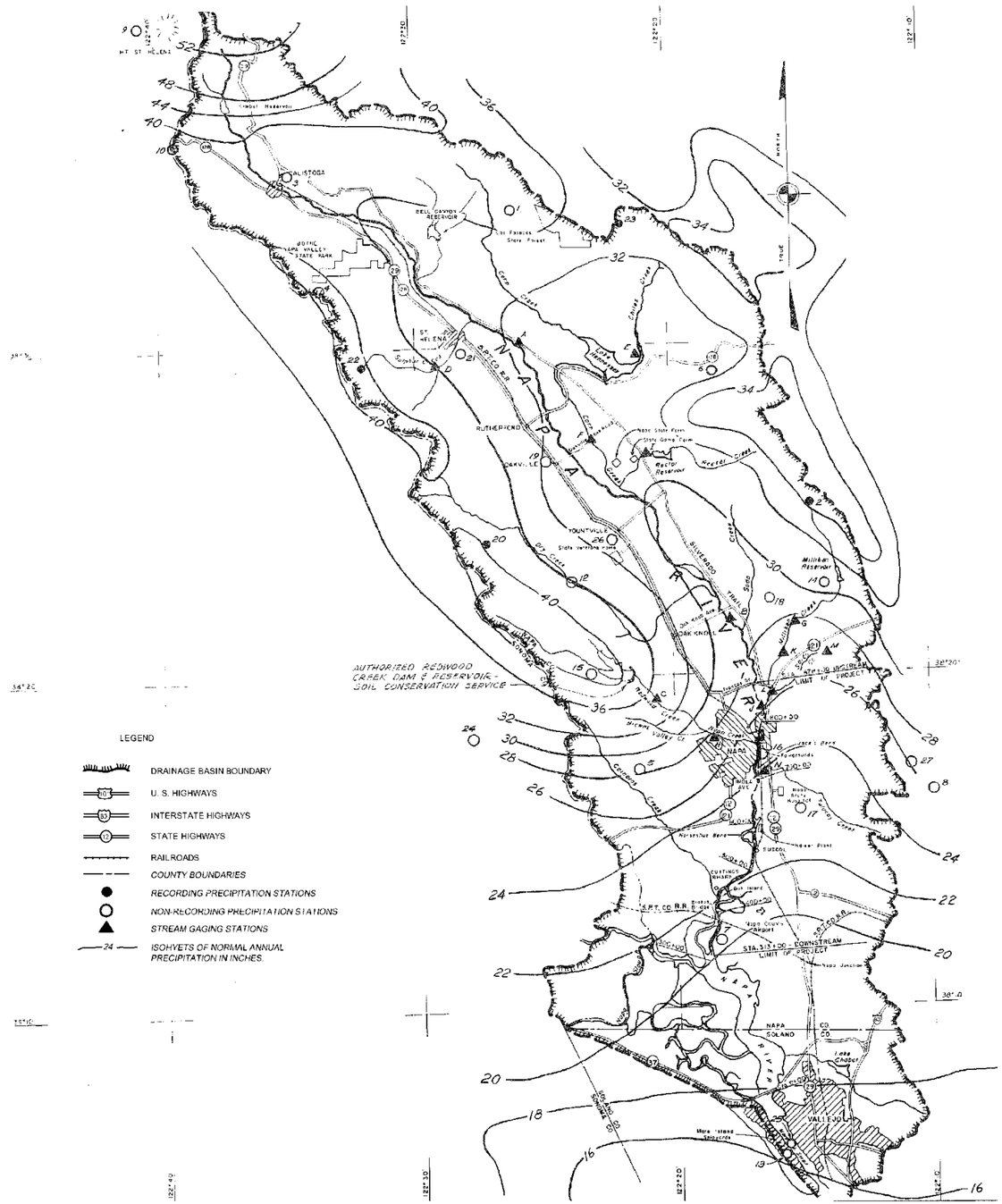

PRECIPITATION CHART
LOWER COUNTY

FLOOD CONTROL
GENERAL DESIGN MEMORANDUM
NAPA RIVER CHANNEL IMPROVEMENTS
NAPA COUNTY, CALIFORNIA
HYDROLOGY AND HYDRAULIC ANALYSIS
NORMAL ANNUAL PRECIPITATION AND HYDROLOGIC INDEX MAP
U.S. ARMY ENGINEER DISTRICT, SAN FRANSICO, CORPS OF ENGINEERS

TO ACCOMPANY REPORT
DATED 12 March 75

FILE NO.
50-47-1

PRECIPITATION CHART
UPPER COUNTY

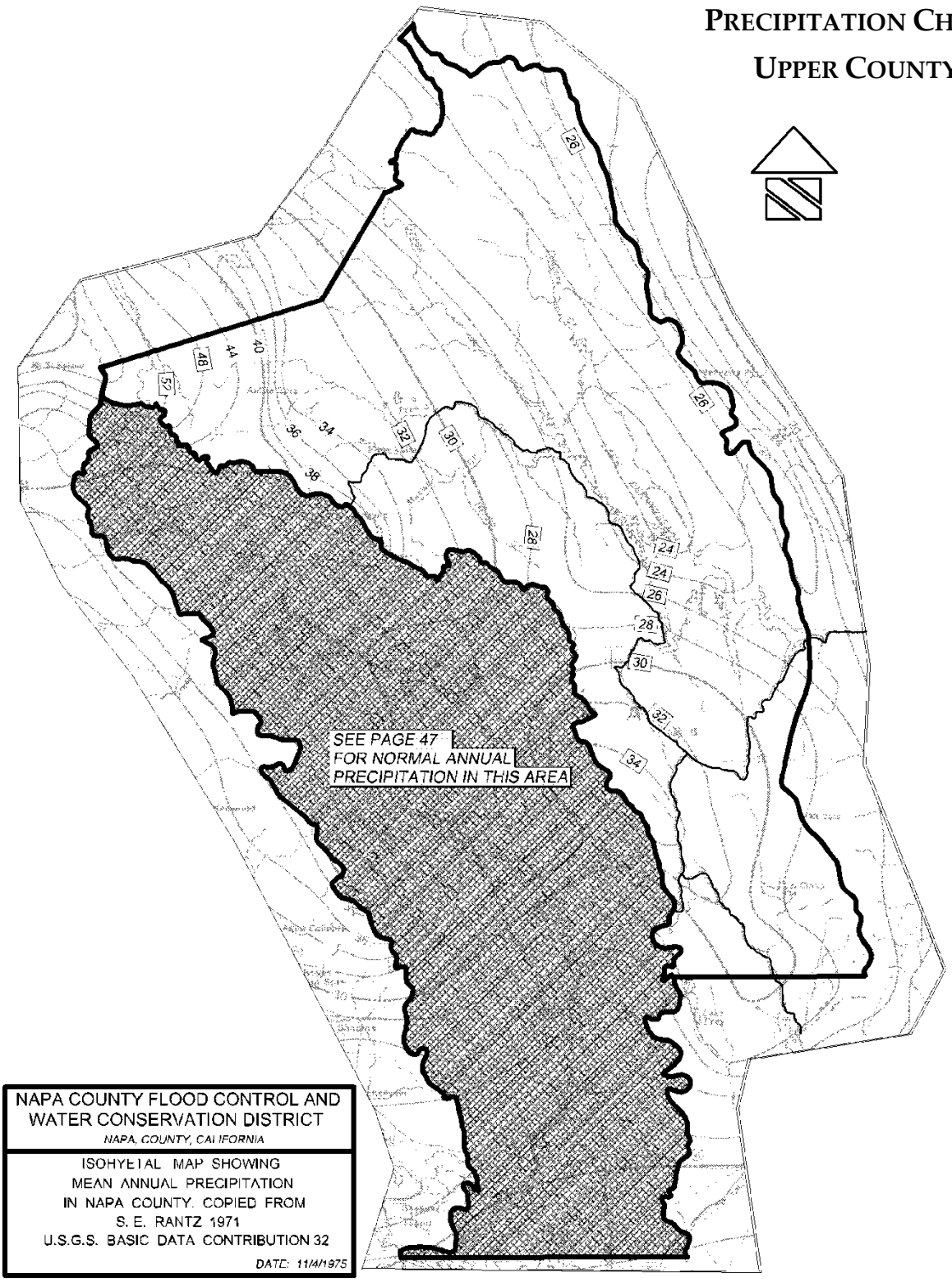

PRECIPITATION CHART – UPPER COUNTY

MEAN ANNUAL PRECIPITATION VS. 60 MINUTE RAINFALL

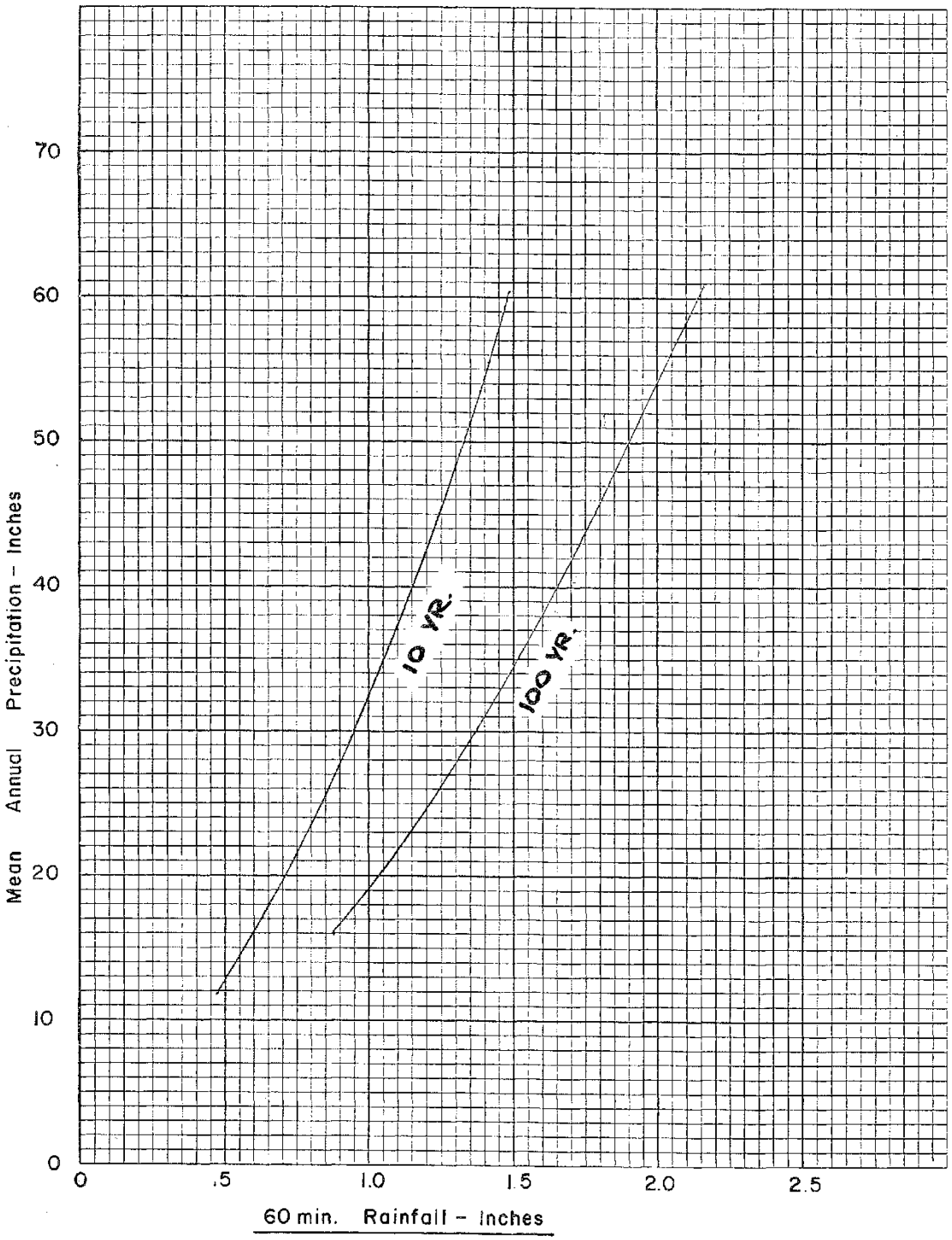

INTENSITY – DURATION CHART

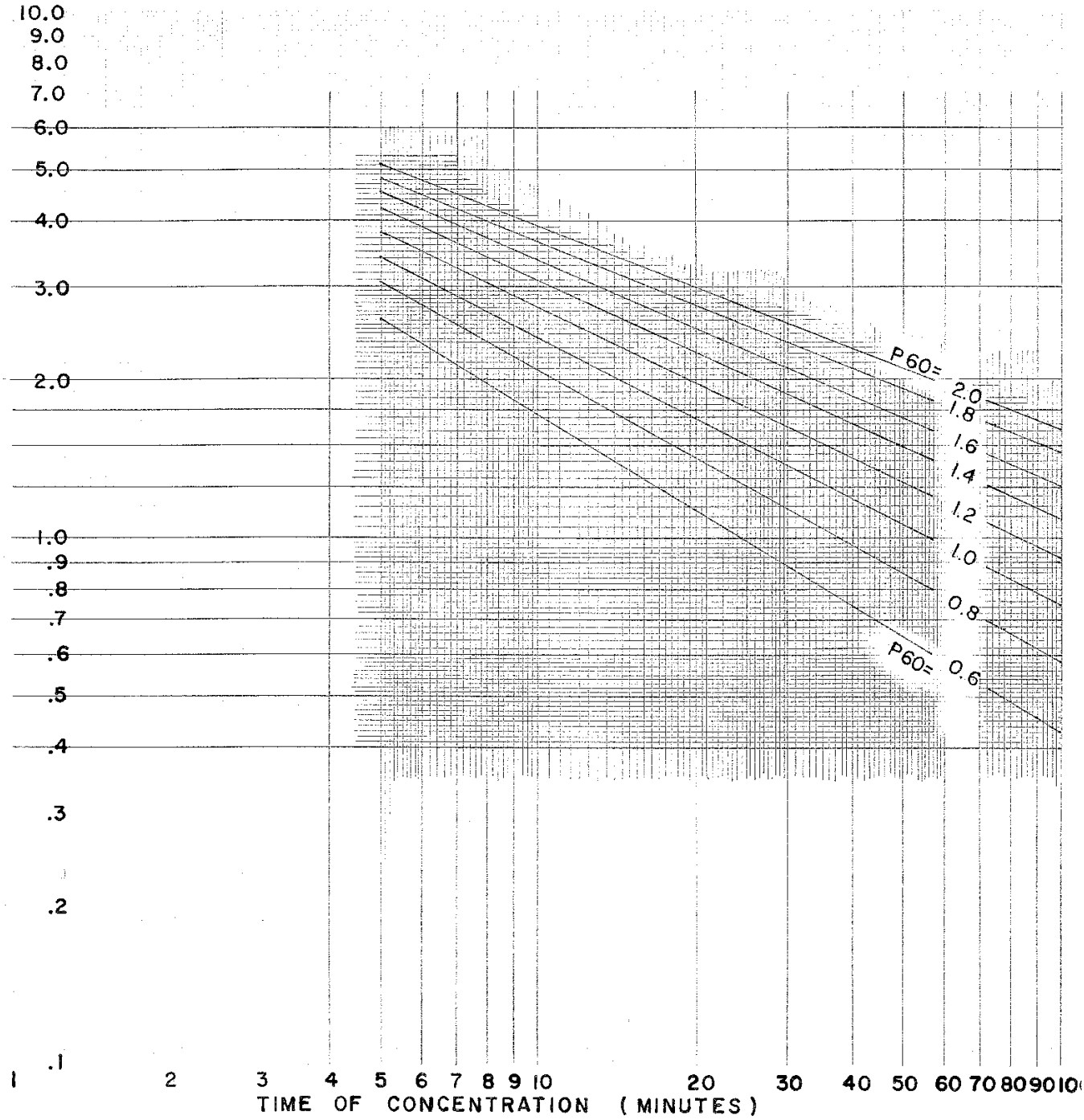

Based on figure 7-811.6 (-8-64)
State of California
Division of Highways
Planning Manual

CRITICAL SLOPES AND CAPACITIES OF ROUND PIPES TABLE

Depth of Flow = 0.6887 D					
Diameter of Pipe (inches)	Area (05768d²)	Velocity (ft/s)	Critical Slope N=0.015	Critical Slope N=0.025	Critical Capacity (CFS)
6	0.14	3.16	0.0132	0.0367	0.5
8	0.25	3.66	0.0119	0.0330	0.9
10	0.40	4.08	0.0110	0.0306	1.6
12	0.58	4.48	0.0104	0.0290	2.6
15	0.90	5.01	0.0097	0.0270	4.5
18	1.30	5.48	0.0091	0.0252	7.1
21	1.77	5.92	0.0086	0.0239	10.5
24	2.31	6.33	0.0083	0.0230	14.6
27	2.92	6.72	0.0080	0.0221	19.6
30	3.61	7.08	0.0077	0.0213	25.6
36	5.19	7.75	0.0072	0.0200	40.2
42	7.07	8.38	0.0069	0.0191	59.2
48	9.23	8.95	0.0066	0.0182	82.6
54	11.68	9.50	0.0063	0.0176	111.0
60	14.42	10.01	0.0061	0.0169	144.3
66	17.45	10.50	0.0059	0.0164	183.2
72	20.76	10.97	0.0057	0.0159	227.7

FIGURE 4

NOMOGRAPH CHART

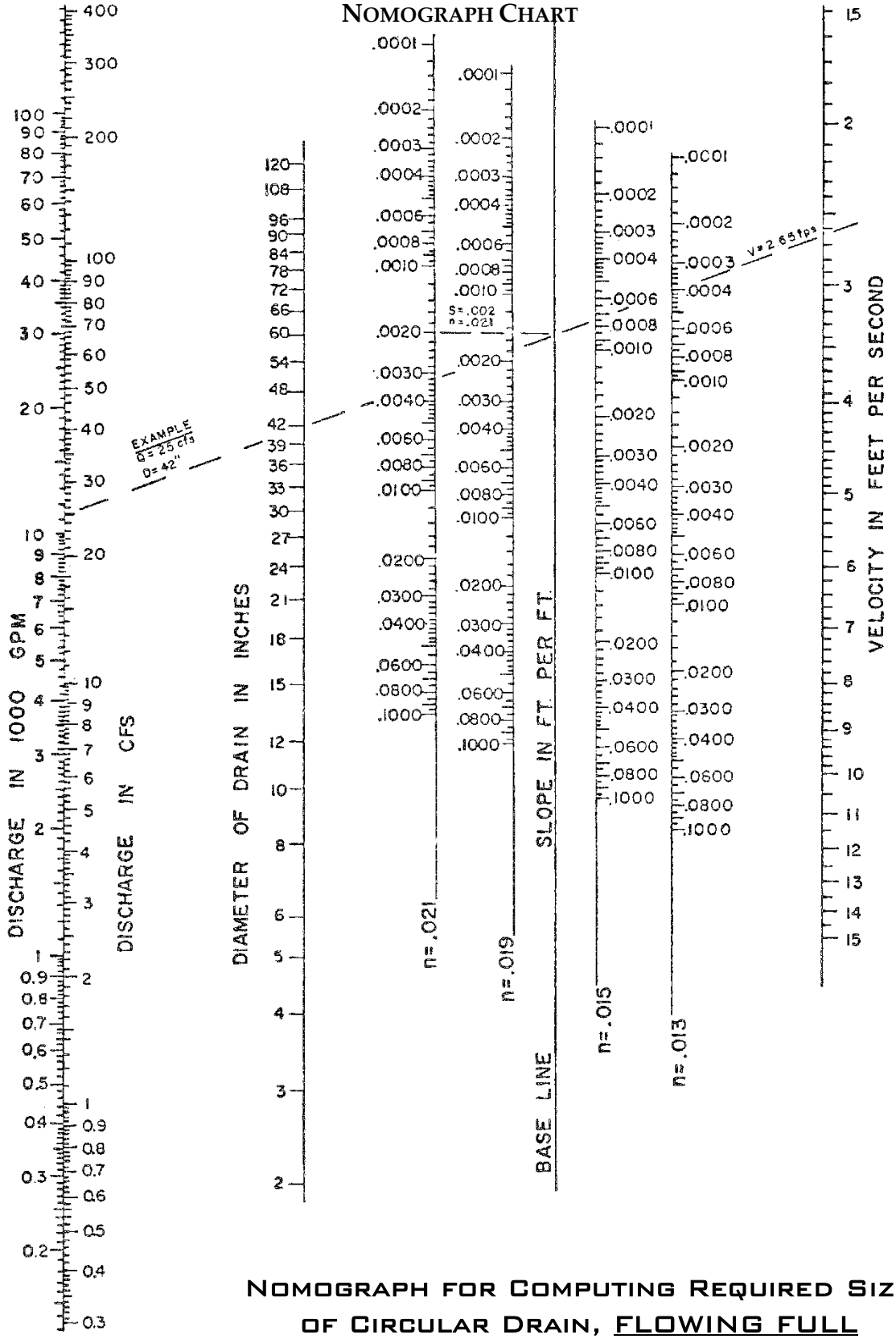

NOMOGRAPH FOR COMPUTING REQUIRED SIZE OF CIRCULAR DRAIN, FLOWING FULL

n = 0.013 n = 0.015

n = 0.019 n = 0.021

Recommended Permissible Velocities for Unlined Channels

Types of Material in Excavation Section	Permissible Velocity (FT/Sec)	
	Intermittent Flow	*Sustained Flow*
Fine Sand (Noncolloidal)	2.5	2.5
Sandy Loam (Noncolloidal)	2.5	2.5
Silt Loam (Noncolloidal)	3.0	3.0
Fin Loam	3.5	3.5
Volcanic Ash	4.0	3.5
Fine Gravel	5.0	4.0
Stiff Clay (Colloidal)	6.0	4.5
Graded Material (Noncolloidal)		
Loam to Gravel	6.5	5.0
Silt to Gravel	7.0	5.5
Gravel	7.5	6.0
Coarse Gravel	8.0	6.5
Gravel to Cobbles (Under 6 inches)	9.0	7.0
Gravel to Cobbles (Under 8 inches)	10.0	8.0

FIGURE 5

23. PLANNED UNIT DEVELOPMENT AND OTHER TYPES

Developments other than the normal single family residential and recreational subdivisions will be improved with facilities that are consistent with the objectives and criteria in the preceding pages. Specific design elements will be determined by the County Engineer on an individual basis.

24. ASSESSMENT DISTRICTS

Improvement requirements for assessment districts are the same as for privately financed developments. However, before an assessment district can be formed, the developer must comply with the requirements of the County's assessment district policy. An excerpt from the County's policy is included below for reference. Full copies of the policy may be obtained from the Department of Public Works.

(a) Purpose of Policy.
   i. To facilitate the acquisition and construction of public facilities in those portions of the County designated on the Napa County General Plan as suitable for commercial or industrial uses if needed to promote any of the following:
      (A) The health and welfare of the developed areas;
      (B) The promotion of the orderly development of the County;
      (C) The development of needed commercial or industrial property.
   ii. Residential improvements shall not be eligible for assessment financing.

(b) Policy considerations regarding the need for an assessment district.
   Factors to be considered in reviewing a request that a special assessment district be formed shall include, but not be limited to, the following:
   i. Is there a need for the development of additional commercial and industrial zoned lots in the community?
   ii. Is the inventory of existing improved parcels in the community adequate?
   iii. Will the proposed assessment, when added to the existing public indebtedness in the area to be assessed, result in an unusually high tax rate or collection charge being assessed which will tend to make the sale or use of the property uneconomic?
   iv. Does the County anticipate debt issuance during the applicable calendar year for purposes of general County operations, which, in the absence of any assessment district debt authorization, would make total County debt issuance eligible for the applicable small issuer arbitrage exemption rule?

(c) Facilities eligible for funding through assessment financing.
   Facilities the construction of which may be financed through assessment proceedings are limited to public facilities located within dedicated rights-of-way or easements which the County or other local agency will be required to maintain and operate. The types of facilities to be financed are:
   i. Streets;
   ii. Drainage facilities;

iii. Public utilities, whether privately or publicly owned, which are appurtenant and incidental to streets or which otherwise provide significant public benefit if not appurtenant or incidental to streets; and
iv. Landscaping when used in conjunction with other public improvements listed above.

25. PARCEL MAP IMPROVEMENTS - RESIDENTIAL DEVELOPMENT

Divisions of land by Parcel Map fall into three general categories: (1) those adjacent to a county road, (2) on an existing private road, and (3) on a proposed new road which may be private or public. Road improvement requirements are as follows:

Case I – Adjacent to County Road

Parcel Size	Improvement
0 to less than ¾ acre	Full improvements including curb, gutter and sidewalk as required for the particular road and dedication of right of way to contain the improvements.
¾ to 2 acres	1. Widen the existing road to provide a minimum 60 foot long parking lane per lot exclusive of driveways, or 2. Provide improved all weather surface in parking areas in accordance with County Standards for 4 cars per lot in addition to garage and carport, or 3. Provide 60 foot building setback from right of way line. A statement shall be placed on a document recorded concurrently with the Parcel Map explaining the parking options and also clearly indicating that one of the three options must be provided before or at the time that a building permit is finalized. On parcels already improved with dwellings, the parking requirements must be met prior to recordation of the Parcel Map.
More than 2 acres to 200 acres	Right of way dedication

Case II – On Existing Private Roads

The portion of the existing private road fronting or crossing the proposed parcels shall be improved to the appropriate subdivision road standard as determined by the County Engineer. That portion of the private road between the subject parcel and the County Road shall be improved to meet the requirements of a Common Drive per Detail C-7. Parking shall be as required for Case I.

Case III – New Roads

Parcel map divisions on new roads, public or private, shall be served by roads constructed to the appropriate subdivision standard. New roads that do not connect to an existing publicly

maintained road system will not be accepted into the County Road System. Parking shall be as required for Case I.

26. PARCEL MAP IMPROVEMENTS - COMMERCIAL AND INDUSTRIAL DEVELOPMENT

Full road and drainage improvements shall be constructed for all parcel map divisions in areas zoned industrial or commercial.

27. SPECIFICATIONS

The following specifications shall apply to all developments, public or private.

ROAD AND STREETS

Street and road work shall conform to approved Plans and Profiles, the Napa County Standard typical sections, these special requirements, and Caltrans Standard Specs, except that all Portland cement concrete shall be "Class B," with 1 ½ inch maximum aggregate.

Roadway excavation shall be in accordance with Section 19-2 of Caltrans Standard Specs, except that sub-grade excavation below the grading plane as specified in Section 19-5.03 will not be required. When the original ground below the grading plane and within 2 ½ feet of finished grade has a relative compaction of less than 95 percent, the 0.5 foot of base material below said grading plane shall be compacted until not less than 95 percent relative compaction is obtained.

Embankment construction shall conform to Section 19-6 of Caltrans Standard Specs, except that sub-grade excavation or original ground below the grading plane as specified in Section 19-5.03 will not be required. Original ground within 2 ½ feet of finished grade shall be compacted as specified above for excavation areas.

The laying of the aggregate base shall not commence until:

- All of the utility lines, including the following, are installed in the streets;
    - Mains and service connections for water
    - Recycled water
    - Gas
    - Electrical, cable television or telephone conduit
    - Sanitary sewer
    - Storm drains
- All service connections are made beyond the graded section;
- Backfilling completed in accordance with the hereinafter specified requirements; and
- The County Engineer has approved the subbase in writing.

Aggregate base material and the placing thereof shall conform to Section 26 of Caltrans Standard Specs. Aggregate base material shall be "Class 2 Aggregate Base," 1 1/2 inch maximum

size, or ¾ inch maximum as specified in Caltrans Standard Specs. Subbase material shall be Class 2 in accordance with Section 25 of Caltrans Standard Specs.

A prime coat treatment shall be applied to the finished surfaces of the aggregate base prior to placement of the HMA in accordance with the provisions of Section 39 of said Caltrans Standard Specs. The Liquid Asphalt used for penetration treatment shall conform to the requirements of Section 93 of Caltrans Standard Specs, as modified, and the total amount to be applied will be determined by the County Engineer or authorized representative.

HMA shall be Type B conforming to Section 39-2 of Caltrans Standard Specs. Asphalt binder to be mixed with aggregate shall be a steam-refined paving asphalt conforming to performance grading PG 64-10 in accordance with Section 92 of Caltrans Standard Specs.

Napa County standard barricade(s) shall be constructed at the end of all stub streets, and at any other locations as shown on the plans.

UTILITIES

All mains and service connections for all utility facilities to be installed in the street area shall be laid to the line and grade shown on the plans or to the line and grade as established by the County Engineer. In no case shall any utility facility be installed in the street area less than 30 inches below finish grade, except storm drain facilities, where approved.

Excavation and backfill for all pipe lines within the roadway section, including mains and service connections for water; gas; electrical, cable or telephone conduit; sanitary sewer and storm drains shall conform to Section 19-3 of Caltrans Standard Specs except as modified herein. The trench shall be filled to 1 foot above the top of the facility with imported fine material, readily compactable around and under the facility; conforming to Section 19-3.06 of Caltrans Standard Specs or equivalent approved by the County Engineer. The remainder of the trench shall be backfilled by one of the following methods:

(a) If a granular backfill material is used for backfilling the remainder of the trench (minimum sand equivalent 30), compaction may be accomplished by adding sufficient water to the material as it is placed in the trench to achieve consolidation and a relative compaction of not less than 90 percent up to 2 ½ feet below finish grade, and 95 percent within 2 ½ feet of finish. If the trench is in solid rock, the backfill shall be compacted to 95 percent relative compaction the entire depth of the trench. The backfill material shall be placed and compacted in layers not exceeding 4 feet in thickness and vibratory or other compaction equipment shall be used whenever necessary to obtain the required compaction. Ponding or use of excessive amounts of water will not be permitted however, and permission from the County Engineer or authorized representative must be obtained before these methods of compaction will be allowed.

(b) The use of material from the excavation for structure backfill will be allowed providing that the relative compaction is 90 percent up to 2 ½ feet below finish grade and 95 percent within 2 ½ feet of finish grade. If the trench is in rock, the backfill shall be compacted to 95 percent

relative compaction the entire depth of the trench. The backfill material shall be placed in horizontal, uniform layers not exceeding 8 inches in thickness before compaction, and shall be brought up uniformly on all sides of the facility and the trench. Compaction must be accomplished by mechanical methods only. No ponding, jetting or use of excessive amounts of water will be allowed.

DRAINAGE

Drainage provisions and structures shall be installed in accordance with the approved Plans and Profiles, the Napa County typical sections and applicable provisions of Caltrans Standard Specs.

In lieu of reinforced concrete pipe, storm drains may be installed outside of the street areas as shown on the approved Plans and Profiles. All such storm drains shall conform to Caltrans Standard Specs.

Sacked Portland cement concrete or Light Stone Rip-Rap conforming to Section 72 of Caltrans Standard Specs shall be placed at the locations indicated on the approved Plans and Profiles or at the locations specified by the County Engineer or authorized representative. Sufficient rip-rap shall be placed at each location to insure adequate protection for the facilities involved.

STREET SIGNS

Public Streets: Napa County street signs shall be located and installed per Detail D-6. Street signs shall be designed per Detail D-6A and the latest version of the California Manual on Uniform Traffic Control Devices.

Private Streets, Lanes and Driveways: Signs shall be located, installed and designed in accordance with the latest version of the CBOF State Responsibility Area Fire Safe Regulations.

MONUMENTS

Napa County Standard Street Monuments consisting of cast-in-place "Class A" Portland cement concrete, six inches in diameter, eighteen to thirty-six inches in depth, and covered with a standard cast iron monument cover, shall be installed in the streets as shown on the approved Plans and Profiles.

The monuments shall have the exact point marked by cross on a brass disk bearing the license number of the Engineer or Surveyor making the survey, fastened by a rod or dowel into the concrete. See Standard Detail D-7.

In lieu of the above type monument, on the exterior boundary angle and curve points not in the street area, the following type monuments will be allowed: A three quarter inch minimum interior diameter galvanized pipe at least three feet long projecting one inch above ground, filled with mortar, and with the exact point marked on a tag to be permanently set in the mortar by means of a dowel extending not less than two inches into the mortar, or a three-quarter by three-

quarter inch steel T-bar at least three feet long projecting one inch above ground, treated with a corrosion resisting coating and fitted with a one inch minimum diameter brass cap attached to the stake by means of a drive screw.

Following the setting of all monuments and the completion of all other improvements required hereunder, the street monuments and exterior boundary monuments may be field checked and the measurements obtained will be compared with the dimensions shown on the Parcel Map or Final Map. Any discovered errors in excess of the allowable error as specified in the Napa County Standards shall be corrected prior to the acceptance of the subdivision improvements by Napa County. After discovered errors have been corrected, the County will make one re-check at no cost. Any additional checks required by the County will be at the expense of the developer, and a cash deposit for the monument checking will be posted with the County prior to field work by County crews.

GENERAL

The developer shall notify the County Engineer in writing, at least three working days in advance of the commencement of any part of the work. In addition, the developer's contractor and subcontractor shall contact the County Engineer's office to arrange a pre-project conference for the purpose of reviewing job requirements and County procedures. It is the developer's responsibility to supply the contractor with a copy of this document prior to construction. Upon completion of all work, including the setting of all monuments, the developer shall request a final inspection in writing. The Fire Marshal will ensure that disposal, including chipping, burying, burning or removal to a landfill site approved by the local jurisdiction, of flammable vegetation and fuels caused by site development and construction, road and driveway construction, and fuel modification shall be completed prior to completion of road construction or final inspection of a building permit.

No variation in the corrected and approved plans, conditions, specifications and provisions will be allowed without first obtaining approval for each variation from the County Engineer. Any request for variation shall be submitted in writing to the County Engineer. No work shall be done on the portion of the work on which the variation is requested until written approval is obtained from the County Engineer.

HYDRANT/FIRE VALVE

The hydrant or fire valve shall be eighteen (18) inches above finish surface. Its location in relation to the road or driveway and to the building(s) or structure(s) it serves shall comply with California Fire Code, California Code of Regulations title 24, part 9, Chapter 5, and Appendix C.

The hydrant head shall be a two and half (2-1/2) inch National Hose male thread with cap for pressure and gravity flow systems and four and a half (4-1/2) inch for draft systems. Hydrants shall be wet or dry barrel and have suitable freeze or crash protection as required by the local jurisdiction.

The Fire Marshal will ensure compliance with this rule.

SIGNING OF WATER SOURCES

Each hydrant, fire valve, or access to water shall be identified as follows:

(a) If located along a driveway, a reflectorized blue marker, with a minimum dimension of three (3) inches shall be located on the driveway address sign and mounted on a fire retardant post, or

(b) If located along a road,

(i) a reflectorized blue marker, with a minimum dimension of three (3) inches, shall be mounted on a fire retardant post. The sign post shall be within three (3) feet of said hydrant or fire valve, with the sign no less than three (3) feet nor greater than five (5) feet above ground, in a horizontal position and visible from the driveway, or

(ii) as specified in the State Fire Marshal's Guidelines for Fire Hydrant Markings Along State Highways and Freeways, May 1988.

The Fire Marshal will ensure compliance with this rule.

PERMITS

The Department of Public Works and Planning, Building, and Environmental Services shall, upon request of the County agencies and departments, make comments and recommendations in response to various applications and permit requests. The department(s) shall review such applications and at the discretion of the County Engineer make recommendations consistent with these Standards.

STANDARD DETAILS

P-1 ON LOT PARKING DETAIL

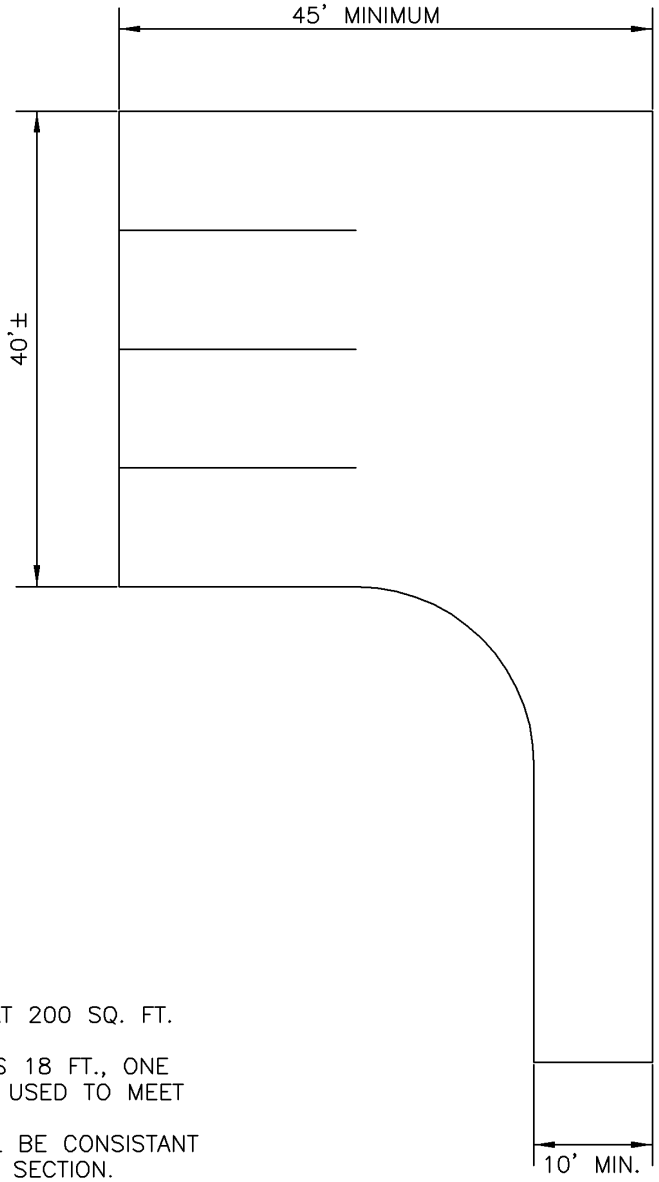

NOTE:
1. 2 TO 4 SPACES PER LOT AT 200 SQ. FT. PER SPACE.
2. IF DRIVEWAY WIDTH EXCEEDS 18 FT., ONE HALF OF DRIVEWAY MAY BE USED TO MEET PARKING REQUIREMENTS.
3. STRUCTURAL SECTION SHALL BE CONSISTANT WITH DRIVEWAY STRUCTURAL SECTION. ALTERNATE STRUCTURAL SECTION MAY BE USED UPON APPROVAL BY COUNTY ENGINEER,
4. MUST BE DUST FREE ALL WEATHER SURFACES.
5. GEOMETRIC DESIGN MAY BE VARIED.

NOT TO SCALE

COUNTY OF NAPA
DEPT. OF PUBLIC WORKS

ON LOT
PARKING DETAIL
(LOW DENSITY AREA)

COUNTY ENGINEER RCE 17995

JAN 1999

P-2 DRIVEWAY CONNECTION TO ARTERIAL ROADS – RURAL ROADS

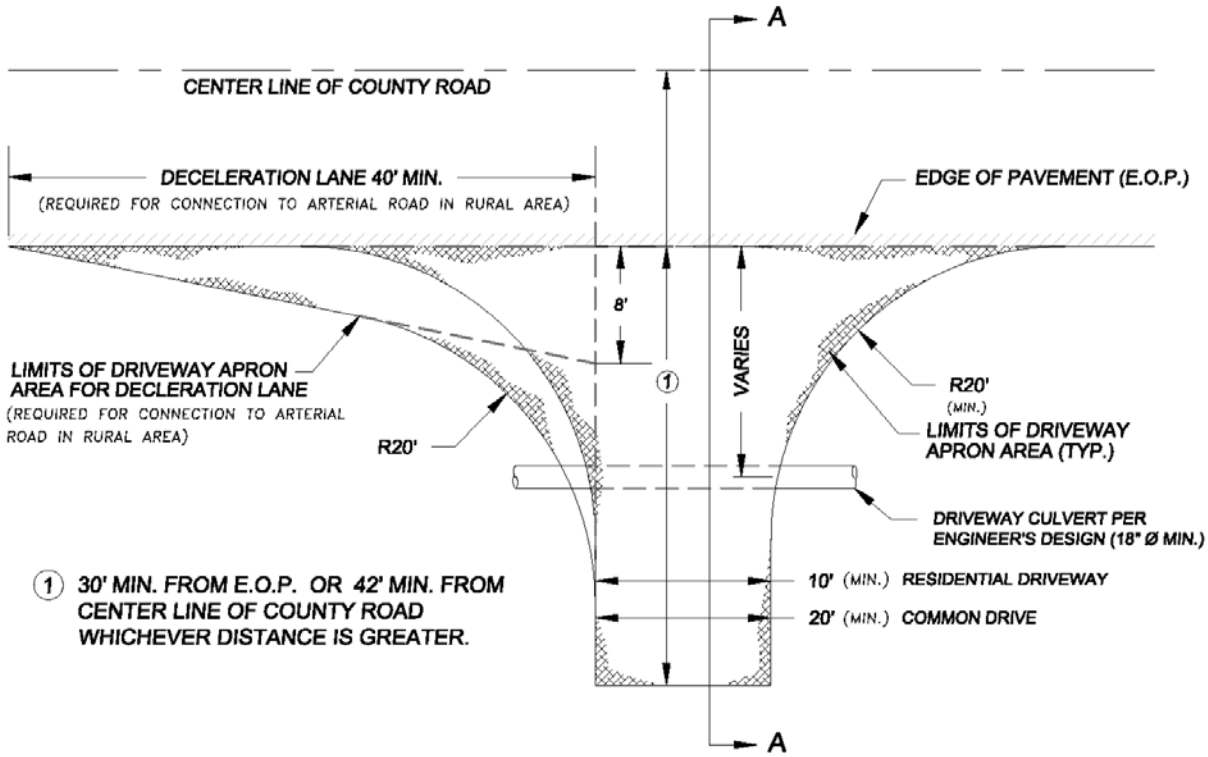

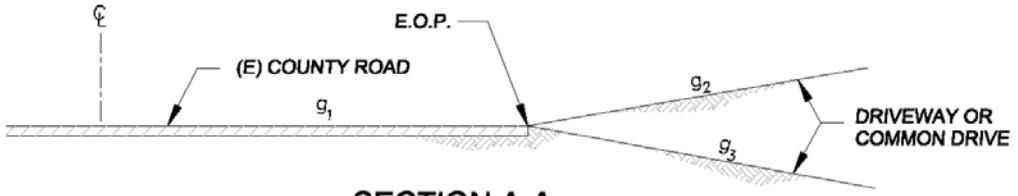

SECTION A-A

PROVIDE A VERTICAL CURVE IN ACCORDANCE WITH SECTION 15 FOR THE FOLLOWING GRADE DIFFERENTIALS:

IF $|g_2 - g_1| > 10\%$ OR IF $|g_3 - g_1| > 6\%$

NOTES:

1. SEE DETAIL D-11 FOR ENTRY GATE DETAIL.
2. APRON AREA SHALL SHALL HAVE A MINIMUM PAVEMENT SECTION OF 2" HMA OVER 5" CL. 2 AB.
3. CULVERT MATERIAL MAY BE STEEL, ALLUMINUM, RCP, OR HDPE. MINIMUM COVER OVER CULVERT SHALL BE IN ACCORDANCE WITH THE MANUFACTURER'S SPECIFICATIONS FOR H20-44 LOADING OR AS DIRECTED BY COUNTY ENGINEER.

NOT TO SCALE

COUNTY OF NAPA
DEPARTMENT OF PBES

DRIVEWAY / COMMON DRIVE CONNECTION TO ARTERIAL ROADS IN RURAL AREAS

ENGINEERING MANAGER RCE 57273

APRIL 2016

P-3 RESIDENTIAL DRIVEWAY AND ADJOINING SIDEWALK

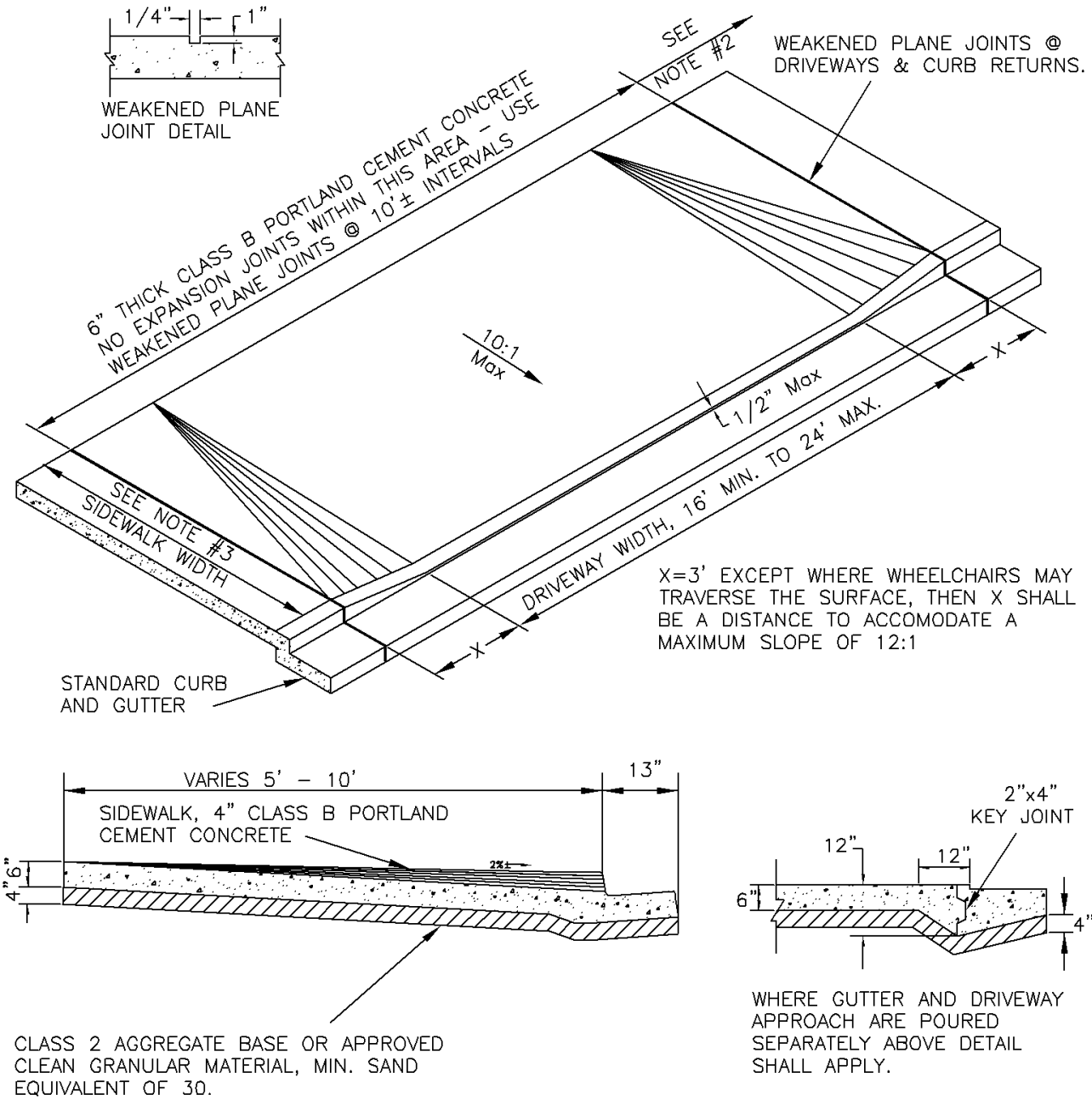

NOTE:

1. IN LIEU OF 6" CONCRETE @ DRIVEWAYS, 4" REINFORCED WITH 6"x6"X#10 WWF MAY BE USED.
2. MINIMUM DISTANCE TO INTERSECTION CURB RETURN SHALL BE 10' (SEE D-5).
3. SIDEWALK WIDTH AND LOCATION SHALL BE RELATIVE TO CURB.
4. INSTALL EXPANSION JOINTS @ 40' INTERVALS.

NOT TO SCALE

COUNTY OF NAPA
DEPT. OF PUBLIC WORKS

RESIDENTIAL DRIVEWAY
AND
ADJOINING SIDEWALK

COUNTY ENGINEER RCE 51790

JUNE 2011

P-4 COMMERCIAL AND INDUSTRIAL DRIVEWAY AND ADJOINING SIDEWALK

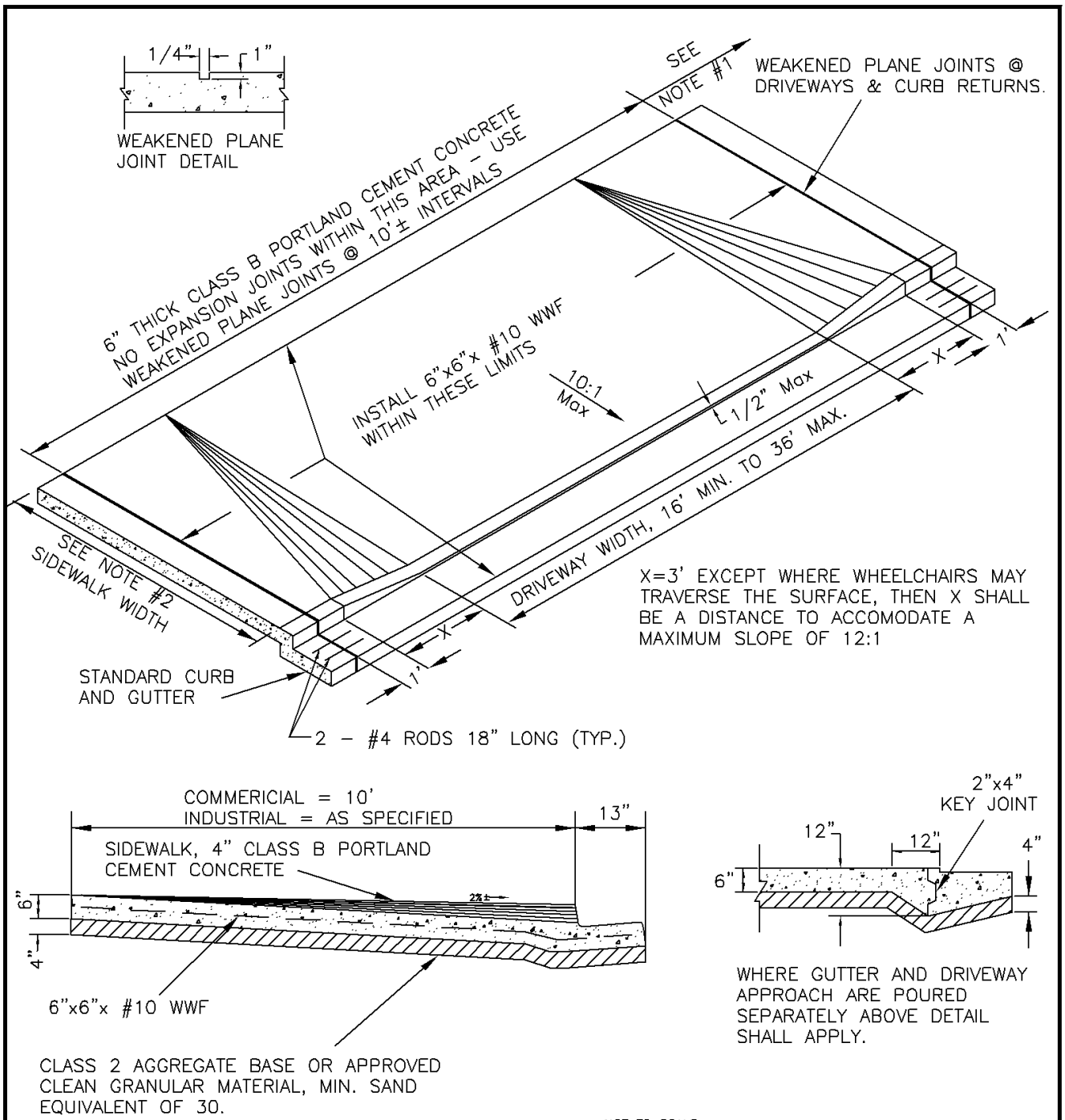

NOTE:

1. MINIMUM DISTANCE TO INTERSECTION CURB RETURN SHALL BE 20' (SEE D-5).
2. SIDEWALK WIDTH AND LOCATION SHALL BE RELATIVE TO CURB.
3. INSTALL EXPANSION JOINTS @ 40' INTERVALS.

NOT TO SCALE

COUNTY OF NAPA
DEPT OF PUBLIC WORKS

COMMERCIAL & INDUSTRIAL DRIVEWAY & ADJOINING SIDEWALK

COUNTY ENGINEER RCE 17995

JUNE 2011

P-5 STANDARD VERTICAL CURB AND GUTTER

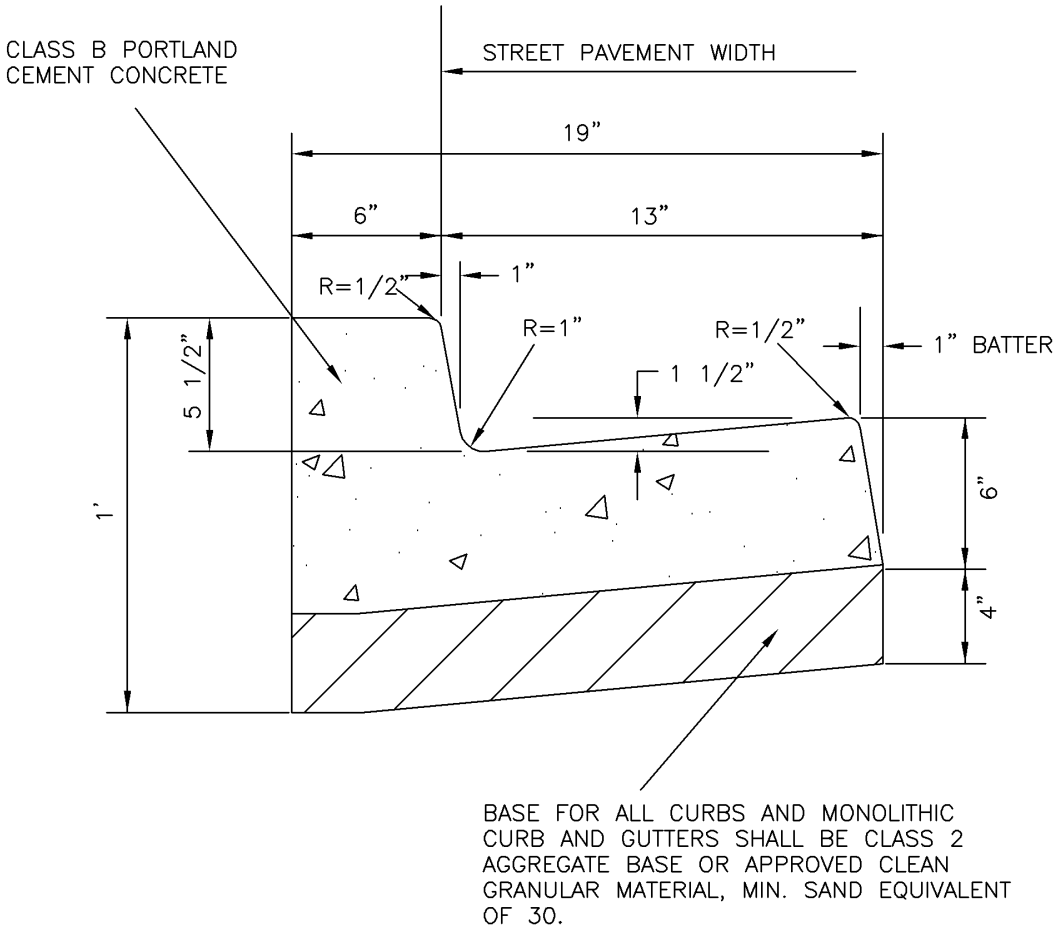

NOTE:

1. INSTALL WEAKENED PLANE JOINTS @ 10' INTERVALS.
2. INSTALL EXPANSION JOINTS @ 40' INTERVALS.

NOT TO SCALE

COUNTY OF NAPA
DEPT OF PUBLIC WORKS

STANDARD VERTICAL
CURB AND GUTTER

COUNTY ENGINEER RCE 17995

JAN 1999

P-6 MOUNTABLE CURB

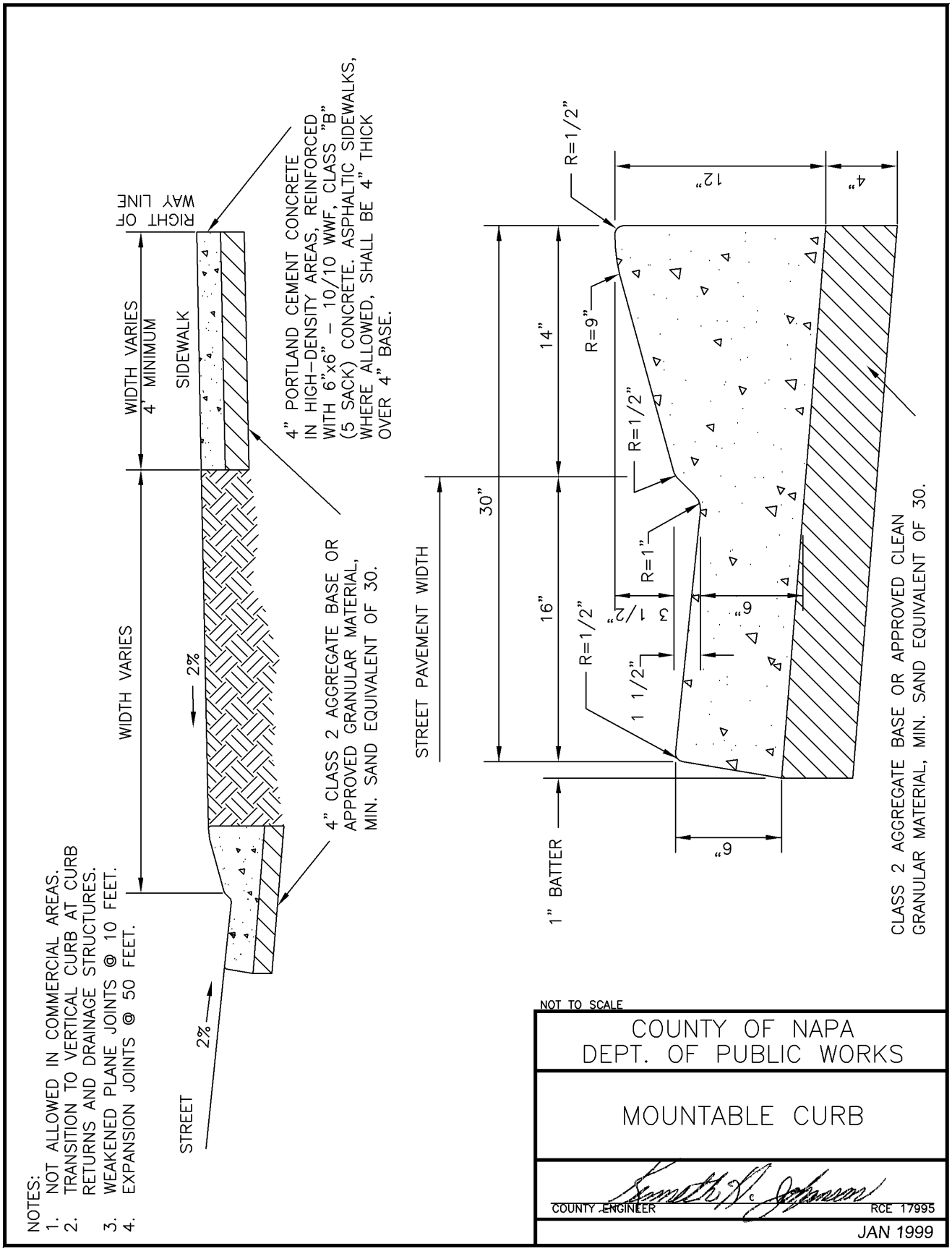

P-7 P.C.C. CROSS GUTTER

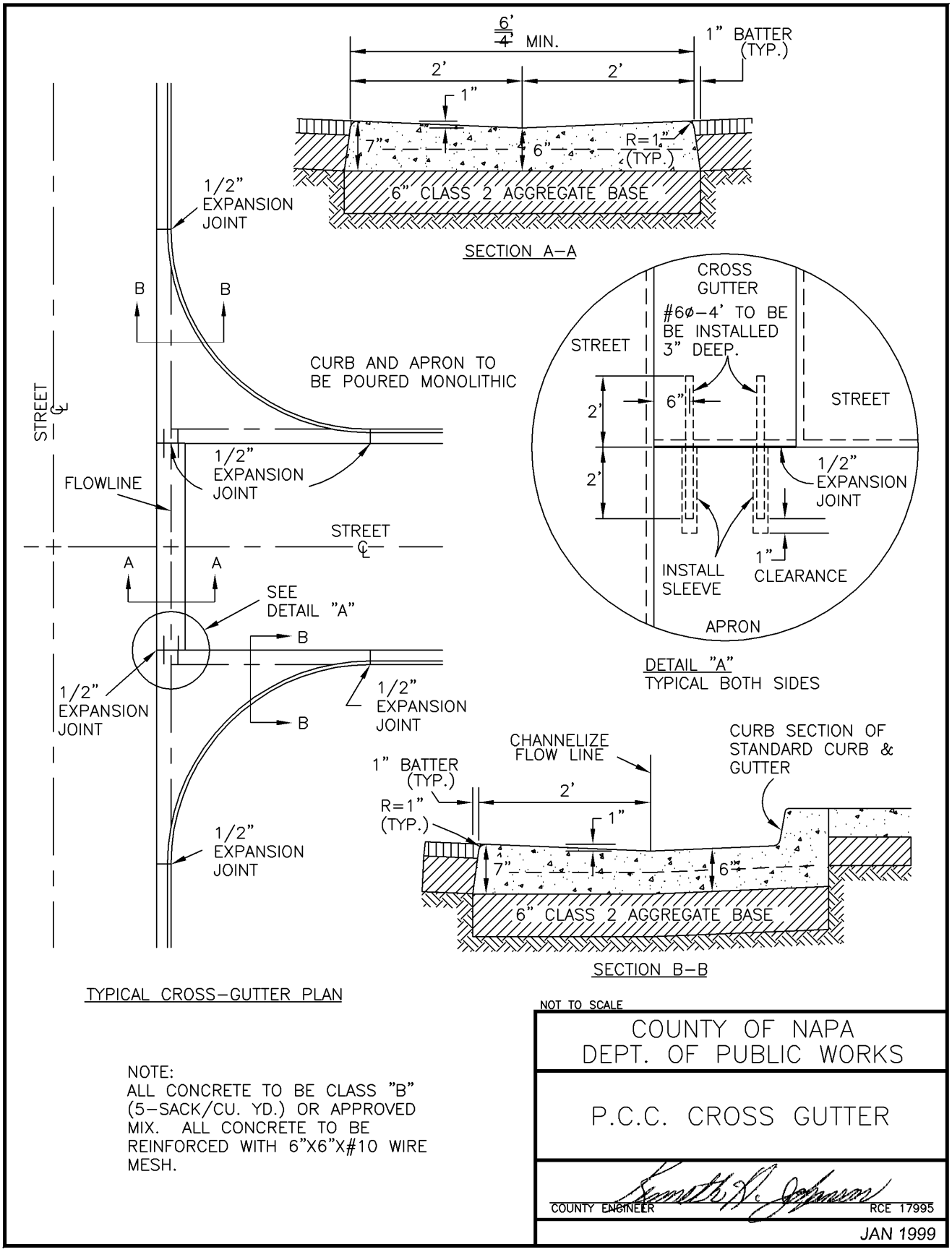

NOTE:
ALL CONCRETE TO BE CLASS "B" (5–SACK/CU. YD.) OR APPROVED MIX. ALL CONCRETE TO BE REINFORCED WITH 6"X6"X#10 WIRE MESH.

P-8 STANDARD ASPHALT DIKE

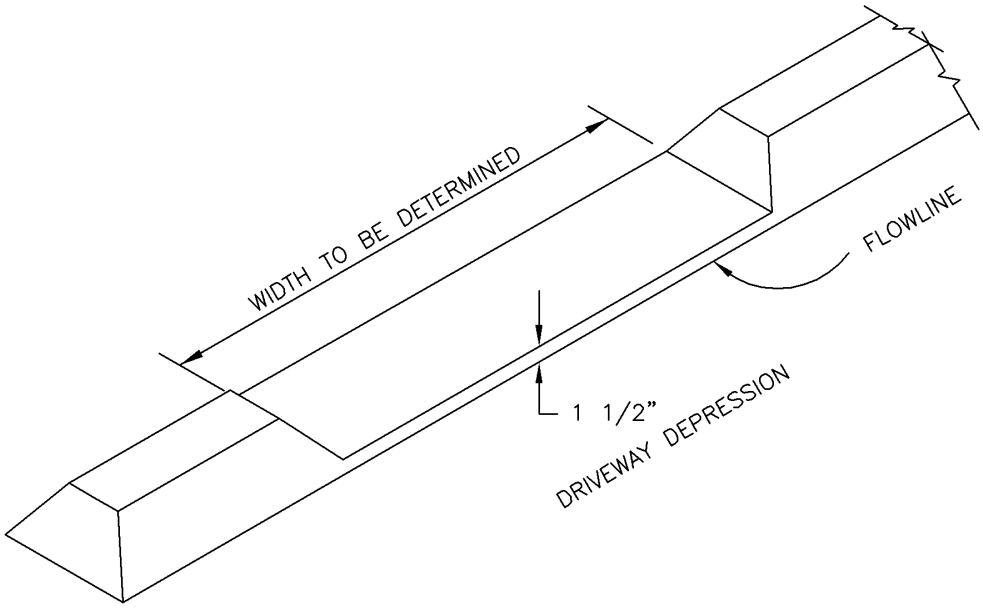

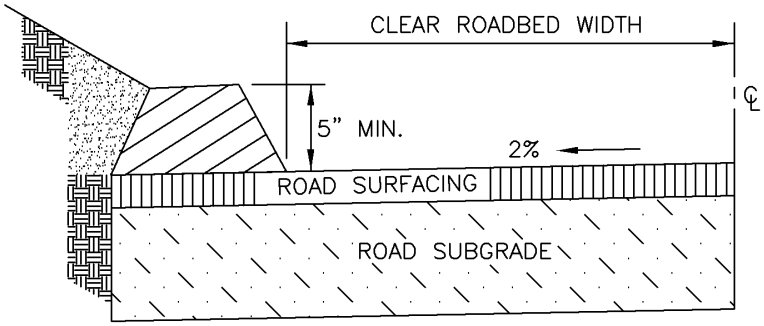

NOTE:
DRIVEWAY APPROACHES ON DOWNHILL SIDE SHALL MATCH TOP OF BERM ELEVATION WITHIN THE ROAD RIGHT OF WAY.

NOT TO SCALE

COUNTY OF NAPA
DEPT. OF PUBLIC WORKS

STANDARD
ASPHALT
DIKE

COUNTY ENGINEER RCE 17995

JAN 1999

P-9 TYPICAL DIKE INSTALLATION

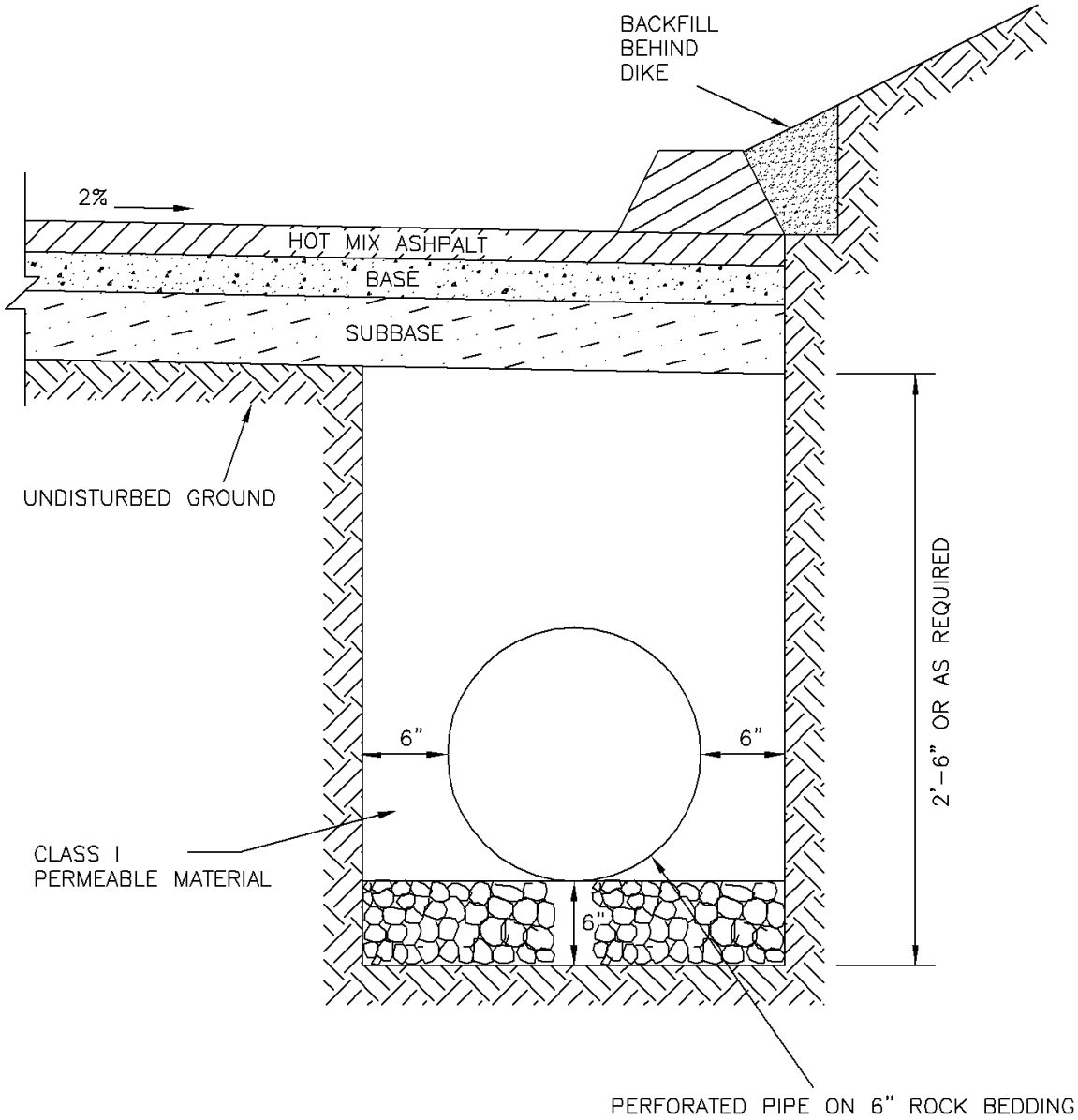

NOTE: SUBDRAINS TO BE INSTALLED AS REQUIRED BY THE COUNTY ENGINEER. TRENCH MAY BE LOCATED 2' FROM EDGE OF PAVEMENT TO FACILITATE CONSTRUCTION. ASPHALT PLUGS SHALL BE PLACED BEHIND THE DIKE AT 50' INTERVALS WHEN ROAD GRADE EXCEEDS 5% OR AS DIRECTED BY THE COUNTY ENGINEER.

NOT TO SCALE

COUNTY OF NAPA
DEPT. OF PUBLIC WORKS

TYPICAL DIKE AND
SUBDRAIN INSTALLATION

COUNTY ENGINEER RCE 17995

DATE: JANUARY 1999

P-10 TRENCH BACKFILL TYPICAL SECTION

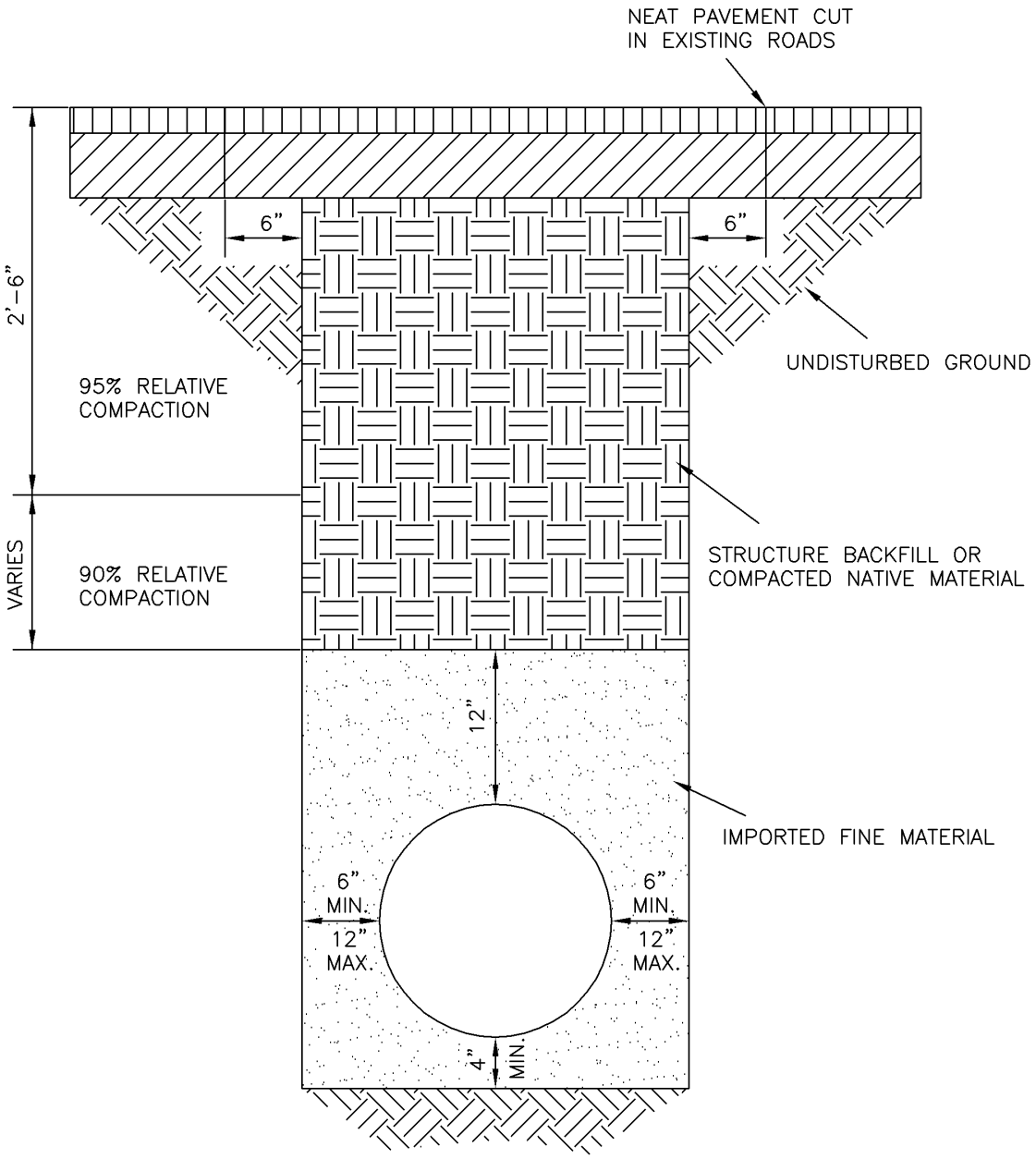

NOT TO SCALE

COUNTY OF NAPA
DEPT. OF PUBLIC WORKS

TRENCH BACKFILL
TYPICAL SECTION

COUNTY ENGINEER RCE 17995

JAN 1999

P-11 DRAINAGE OUTLET

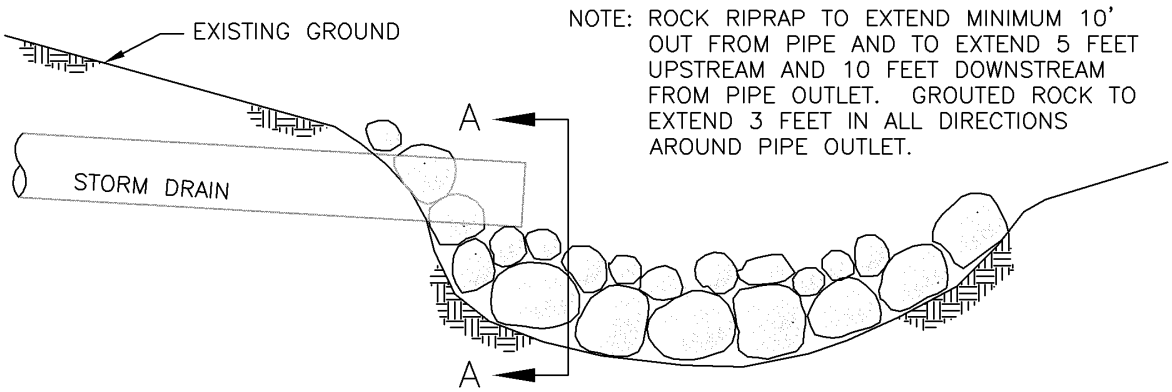

OUTLET (flush type, subcritical flow only)

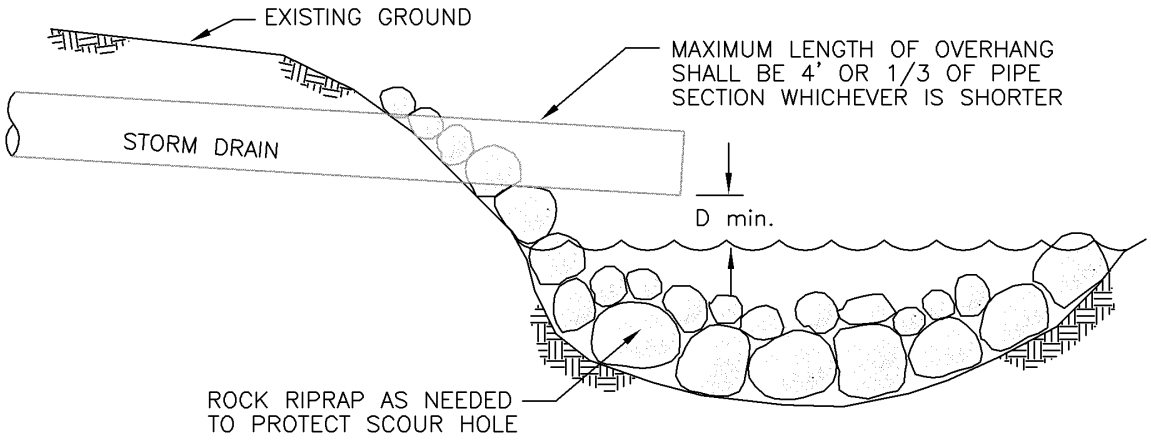

OUTLET (drop type)

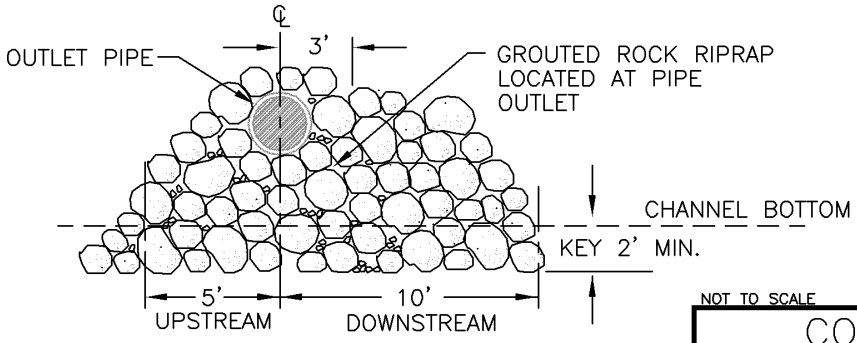

SECTION A–A

NOTE: INSTALL FLAP GATE ANIMAL GUARDS ON DRAINLINE OUTLET PIPES 15" AND SMALLER

ADDITIONAL INFORMATION AVAILABLE AT PUBLIC WORKS OFFICE

NOT TO SCALE

COUNTY OF NAPA
DEPT. OF PUBLIC WORKS

DRAINLINE
OUTLET

COUNTY ENGINEER RCE 17995

JAN 1999

D-1 STORM DRAIN INLET TYPE "A"

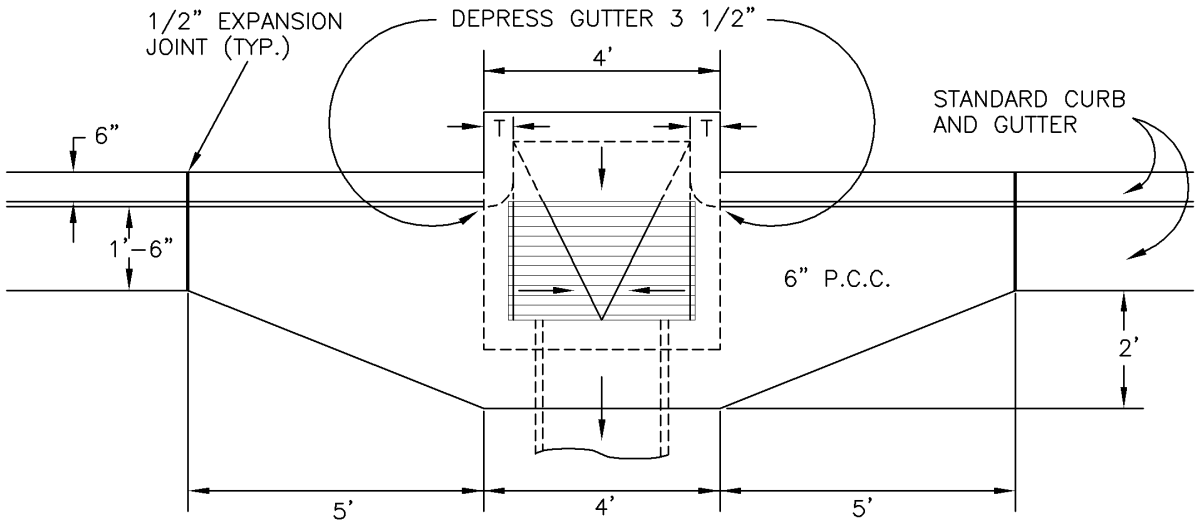

PLAN VIEW

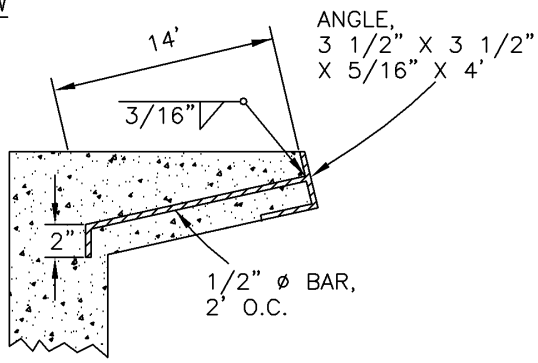

FACE ANGLE ANCHOR DETAIL

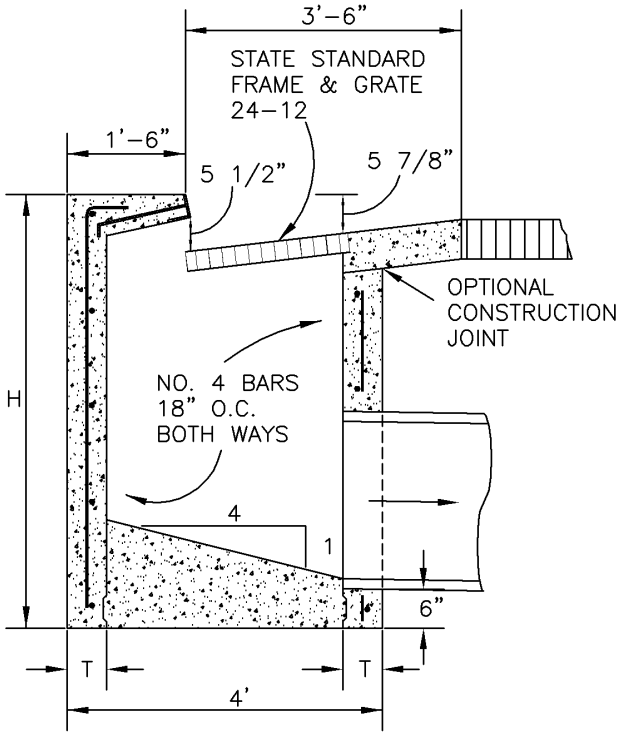

SECTION

NOTE:
T = 6" WHEN H < 8'
T = 8" WHEN H > 8'
NORMALLY USED IN SUMP CONDITION

NOT TO SCALE

COUNTY OF NAPA
DEPT. OF PUBLIC WORKS

STORM DRAIN INLET
TYPE "A"

COUNTY ENGINEER RCE 17995

JAN 1999

D-2 STORM DRAIN INLET TYPE "B"

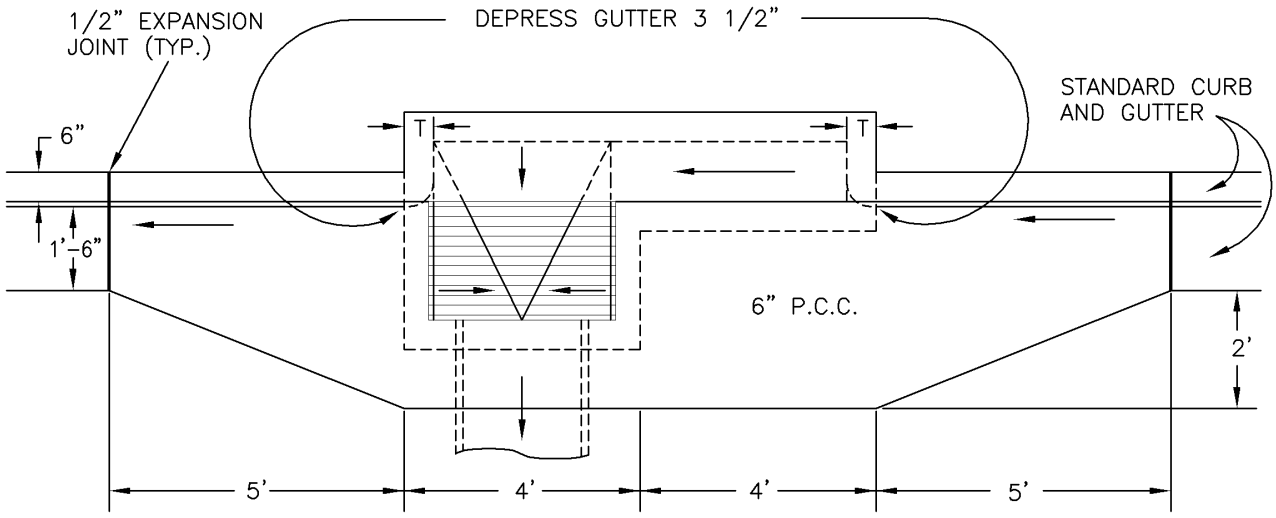

PLAN VIEW

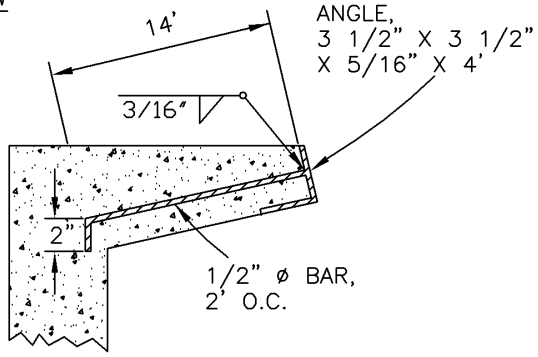

FACE ANGLE ANCHOR DETAIL

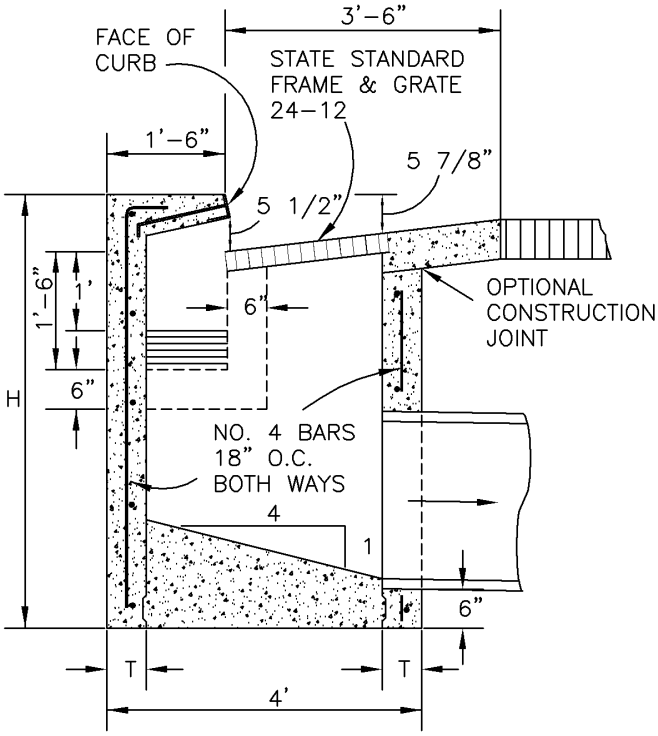

SECTION

NOTE:
T = 6" WHEN H < 8'
T = 8" WHEN H > 8'
NORMALLY USED ON CONTINUOUS SLOPE

NOT TO SCALE

COUNTY OF NAPA
DEPT. OF PUBLIC WORKS

STORM DRAIN INLET
TYPE "B"

COUNTY ENGINEER RCE 17995

JAN 1999

D-3 STORM DRAIN INLET TYPE "C"

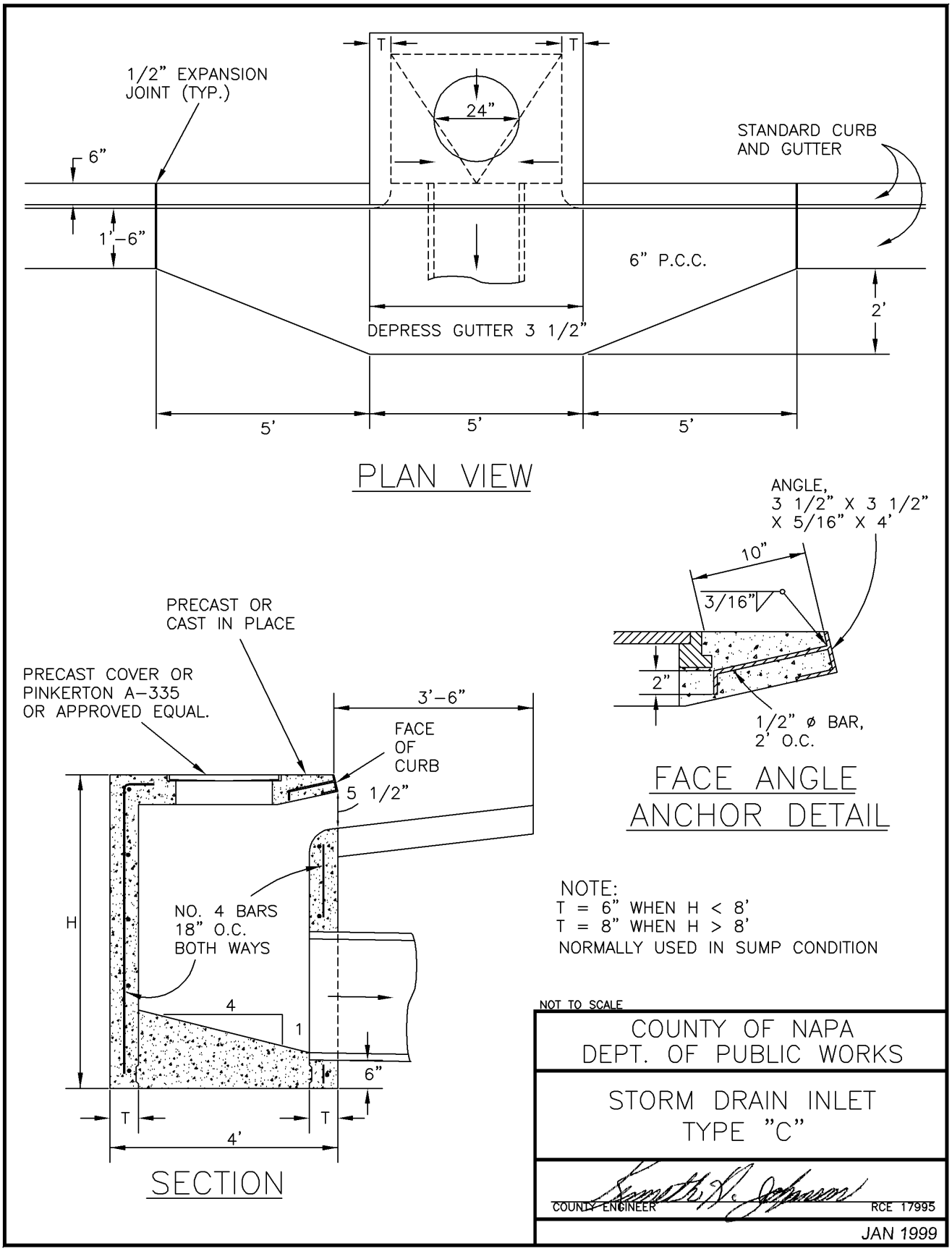

D-4 STANDARD BARRICADE

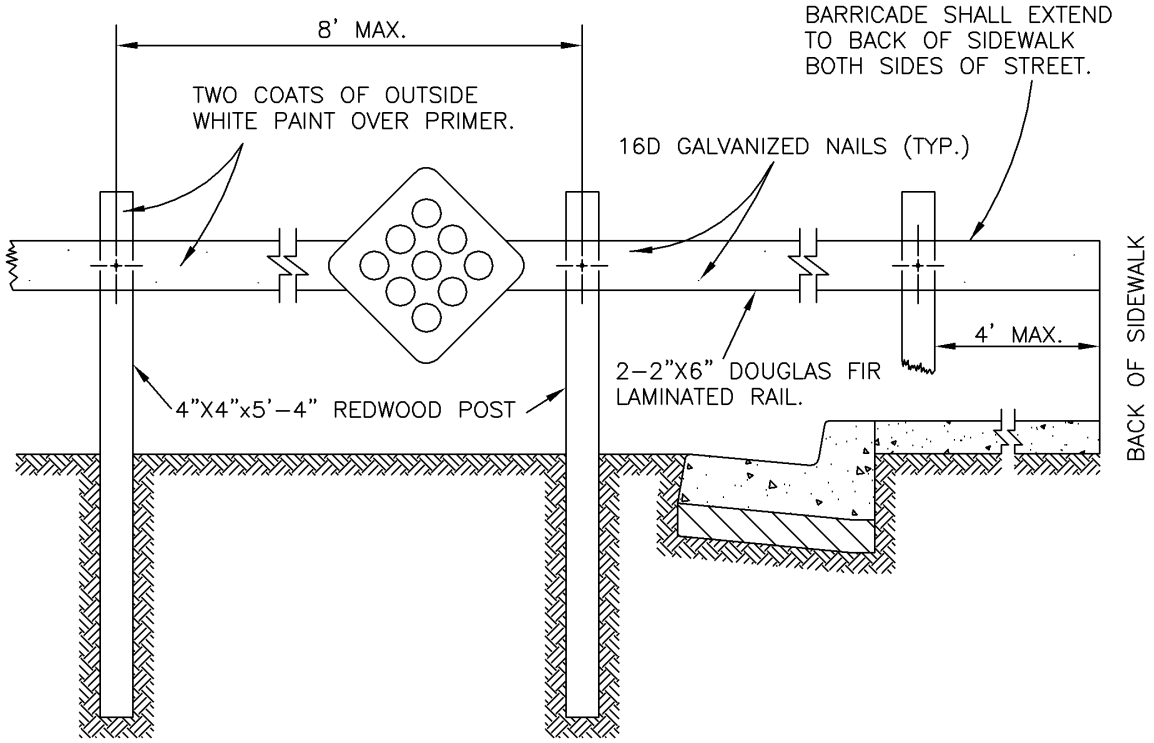

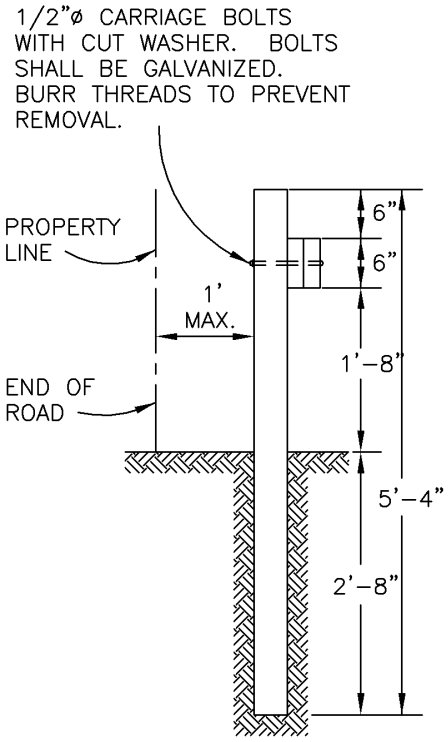

NOTE:
1-TYPE "N" MARKER SIGN TO BE MOUNTED ON BARRICADE FACING ONCOMING TRAFFIC.

NOT TO SCALE

COUNTY OF NAPA
DEPT. OF PUBLIC WORKS

STANDARD BARRICADE

COUNTY ENGINEER RCE 17995

JAN 1999

D-5 DRIVEWAY SETBACK

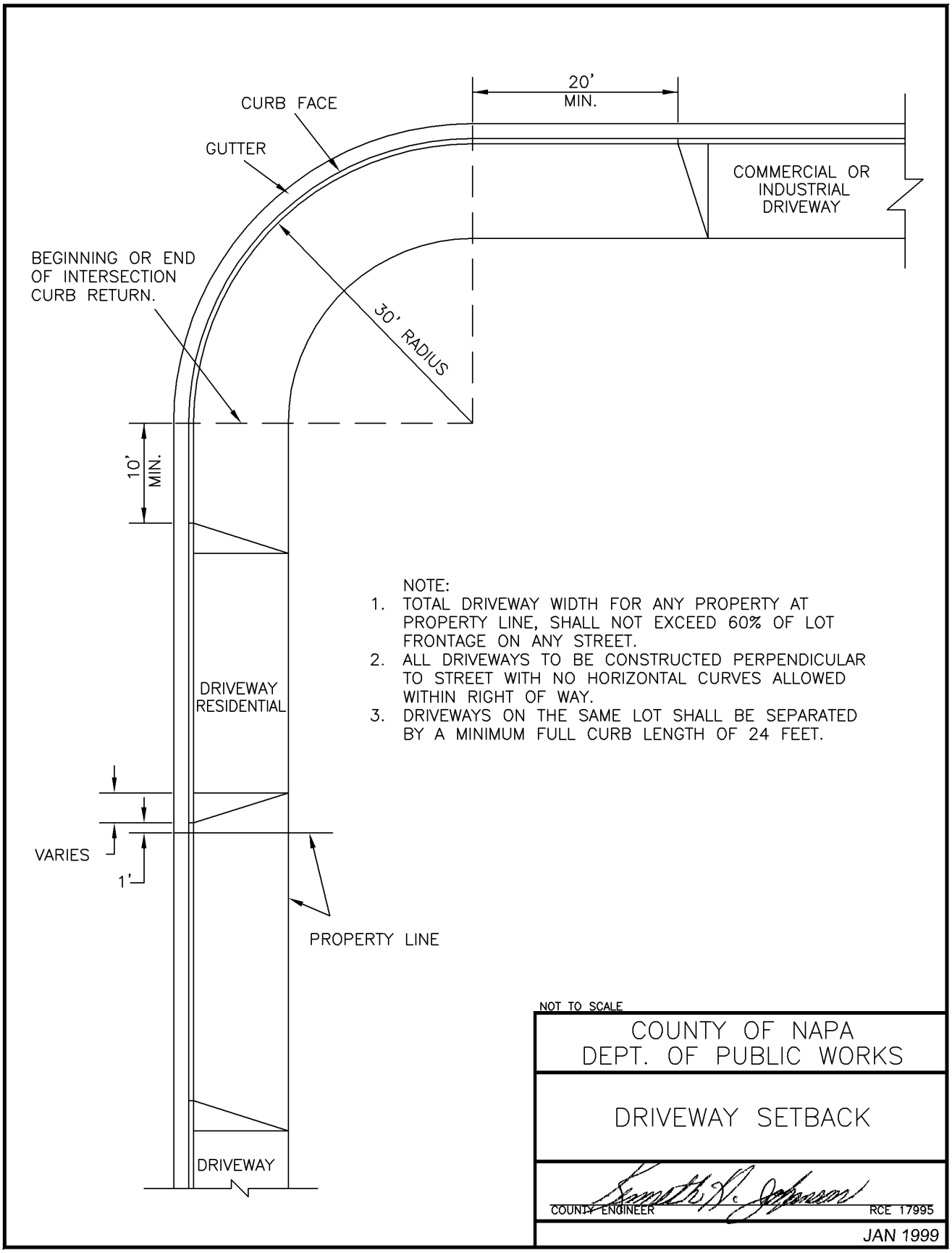

D-6 STANDARD STREET SIGN

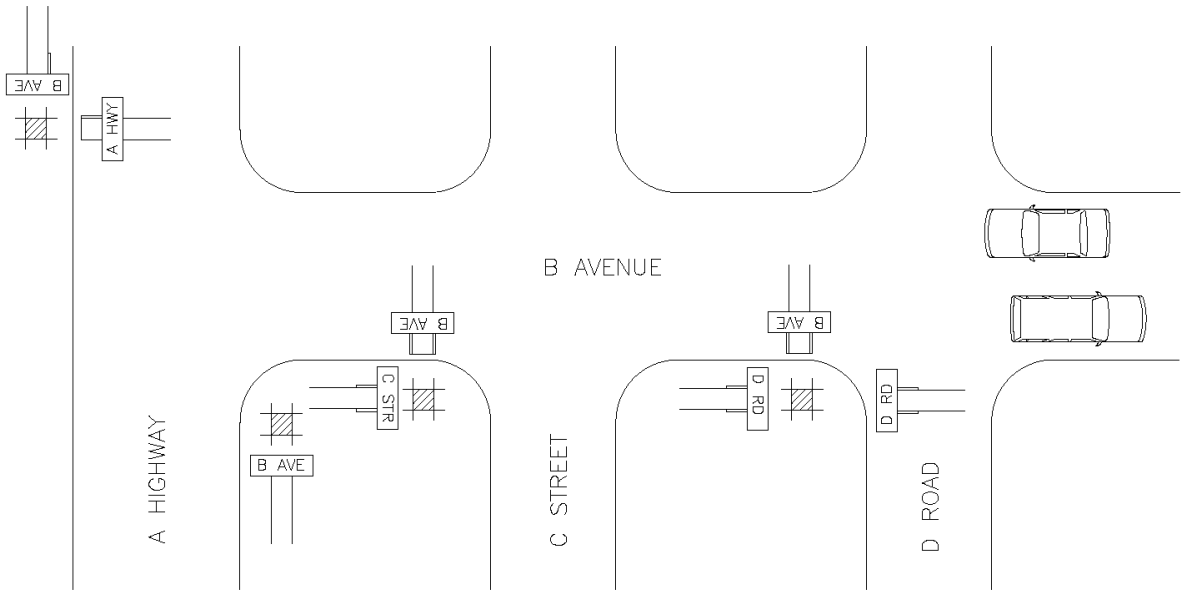

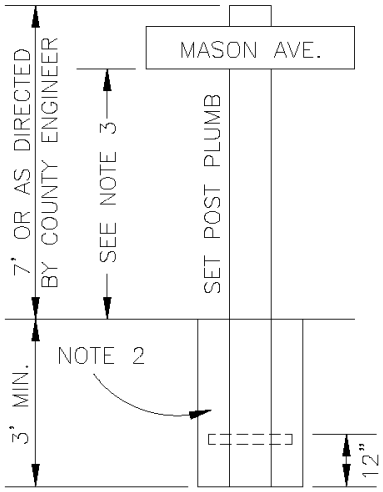

NOTE:

1. LOCATION OF INSTALLATION SHALL BE ON THE RIGHT SIDE OF THE PRIMARY ROAD, APPROACHING INTERSECTION. THE SIGN IDENTIFYING THE SECONDARY ROAD SHALL BE UPPERMOST ON THE POST.
2. BACKFILL MATERIAL SHALL BE SUITABLE MATERIAL AND SHALL BE THOROUGHLY TAMPED AND COMPACTED. IN AREA OF PCC SLABS, FORM 12" SQUARE OR CIRCLE TO EXCLUDE PCC. PLACE BACKFILL TO WITHIN 2" OF F.G. AND TOP WITH MORTAR.
3. IN PEDESTRIAN WALK AREAS, MINIMUM HEIGHT SHALL BE 7' UNLESS OTHERWISE APPROVED BY THE COUNTY ENGINEER. MAY BE 5' TO BOTTOM OF SIGN IN RURAL AREAS WITH NO PEDESTRIAN WALKWAYS.

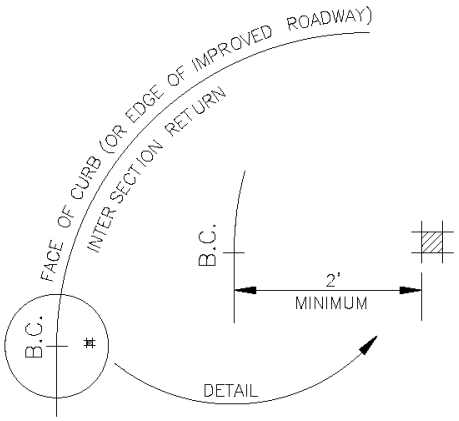

NOT TO SCALE

COUNTY OF NAPA
DEPARTMENT OF PBES

STANDARD
STREET SIGNS

ENGINEERING MANAGER RCE 57273

DATE: JUNE 2016

D-6A STANDARD STREET SIGNS, TYPE 'A' AND TYPE 'B'

STANDARD STREET SIGNS

Street Sign Type A

Size: 30"x9" (36"x9" may be used where additional length is required due to length of copy. If 36" is not sufficient, copy shall be on two lines and size shall be 30" x 18" and 36"x18" may be used if necessary.) If directional arrow is necessary, size shall be as specified for State of California Department of Transportation Type G-7 "Street Name" sign.

Material: .125 gage thickness sheet aluminum 6061-T6 alloy or 5052-H38, State of California "Interstate Green" high intensity wide angle retroreflective sheeting.

Copy: All copy to be in 6" Series C upper case letters, and 4 ½" Series C lower case letters, nomenclature for street, road, avenue, etc.

Borders: All borders to be ½" wide with radiused comers die cut white high intensity wide angle retroflective sheeting.

Layout: Letter spacing and copy layout to be similar to State of California Department of Transportation Type C 1-7 "Street Name Sign."

Fabrication: Blanks to be cut to size with approximately ½" rounding of the comers; two (2) holes drilled for 3/8" bolt mountings, ½" inset on center of blanks: face to be of State of California specification "Interstate Green" high intensity wide angle retroflective sheeting prior to the application of the copy and borders. All copy, borders and sheeting to be applied by the thermo-vacuum process. Copy shall be edge sealed when applied.

Installation: Signs to be mounted on 4" x 4" S4S Redwood or 4" x 4" S4S pressure treated Douglas Fir posts of length necessitated by physical conditions, per Caltrans Standard Specs. 3/8" dia. Carriage bolts with nuts and 1" dia. Washers (all galvanized) for fasteners. Alternate post material and installation will be considered but approval must be obtained prior to installation.

Street Sign Type B

(For installation on State Highways, County Major Arterial Highways and County Major Roads).

Size: 30"x24" (36" x 24"" may be used where additional length is required due to length of copy. If 36" is not sufficient, copy shall be on two lines and size shall be 42"x30" or 42"x36" with full back framing.)

Copy: All copy to be in 8" Series C upper case letters and 6" lower case letters. An arrow 17.25" total length denoting left or right or both ways as may be required, to appear below the road name. Copy and arrow to be die cut from white high intensity wide angle retroreflective sheeting.

Layout: Letter spacing and copy layout to be similar to State of California Department of Transportation Type G-8-22 Street Name Sign.

Material, Fabrication and Installation: Same as Type A.

SUBDIVISION STREET MONUMENTS ACCURACY

SUBDIVISION STREET MONUMENTS

Following is the current established policy of this department for allowable error for subdivision street monuments:

Slope of 75% Of Land	Distance Between Monuments	Angle Between Tangents and/or Chord
0 < 8%	1 / 50,000	4 seconds
8 < 15%	1 / 25,000	8 seconds
15% <	1 / 15,000	14 seconds

D-7 SURVEY MONUMENT

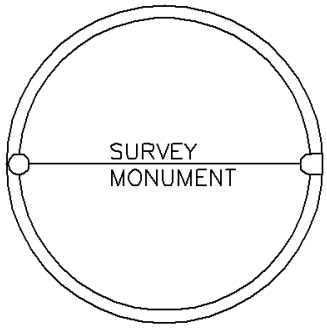

COVER PLAN

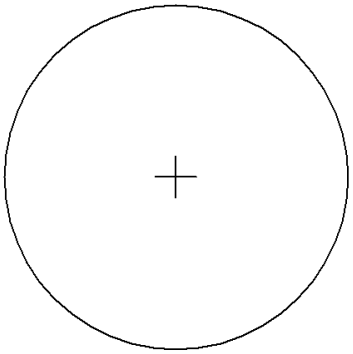

CAP PLAN

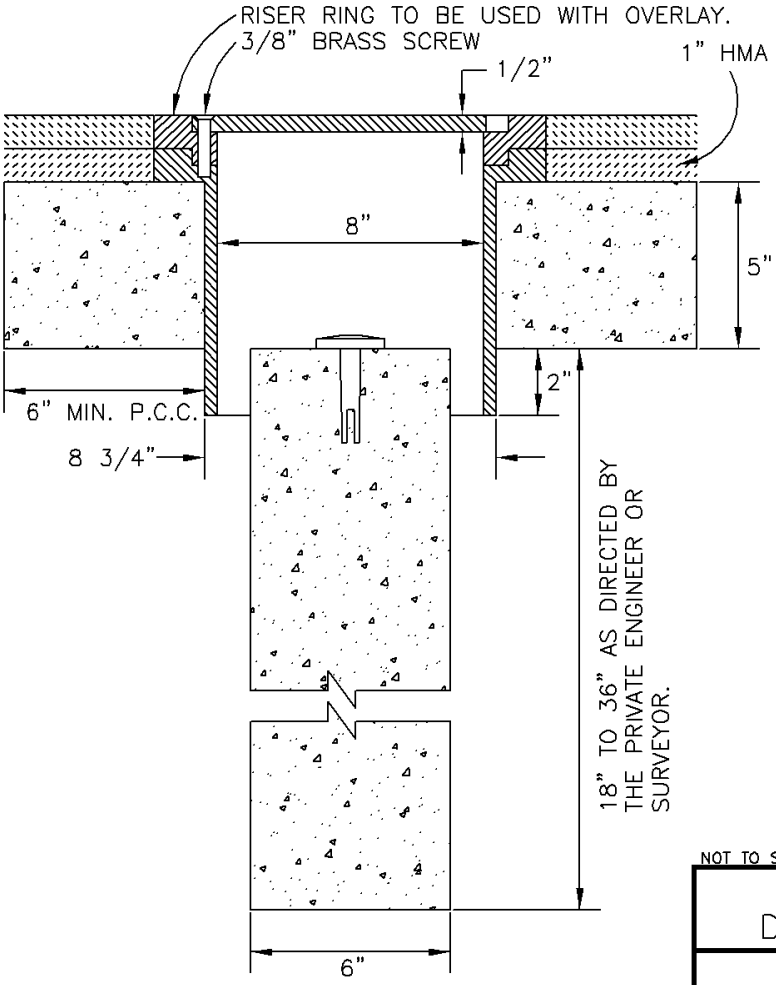

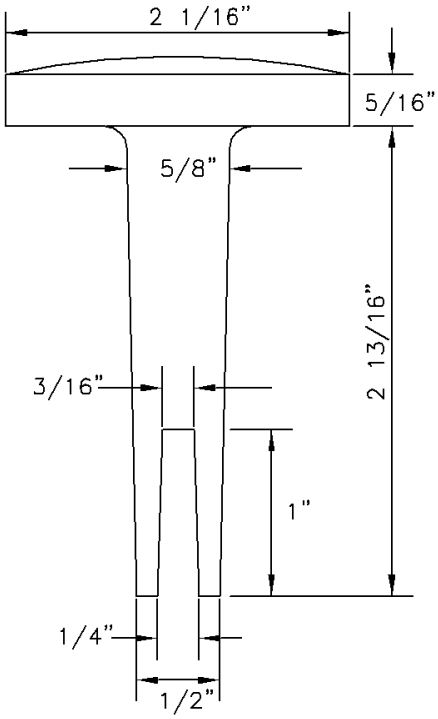

NOT TO SCALE

NOTE:
THE PRIVATE ENGINEER OR SURVEYOR SETTING THE MONUMENT SHALL INDICATE THE EXACT POINT BY MARKING A CROSS ON THE CAP. HE SHALL STAMP HIS LICENSE TYPE AND NUMBER.

COUNTY OF NAPA
DEPT. OF PUBLIC WORKS

SURVEY MONUMENT

COUNTY ENGINEER RCE 17995

DATE: JANUARY 1999

70 D-7

D-8 OFF STREET PARKING

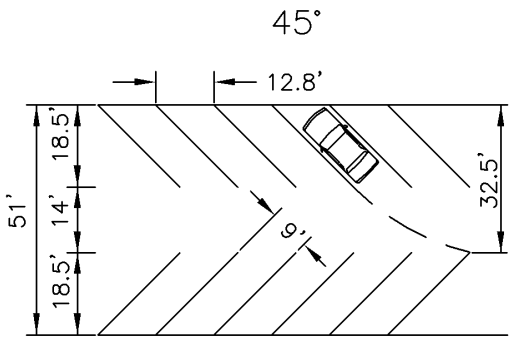

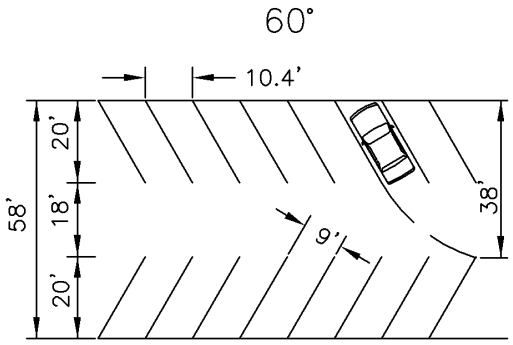

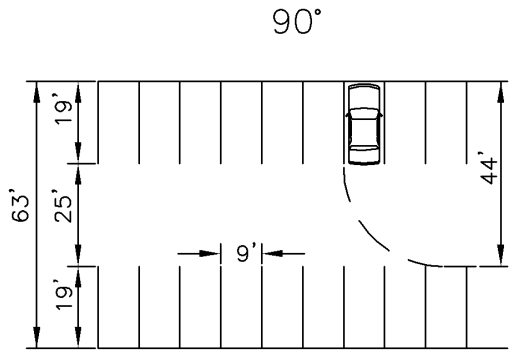

NOTES

1. ALL PARKING AREAS AND DRIVEWAY ACCESS THERETO SHALL BE IMPROVED TO A DUST FREE ALL WEATHER SURFACE – A MINIMUM OF 5 INCHES OF CLASS 2 AGGREGATE BASE AND EITHER 2 INCHES OF ASPHALT CONCRETE OR A DOUBLE SEALCOAT. (THE OPTION SHALL BE THE CHOICE OF THE COUNTY ENGINEER.)
2. WHERE PUBLIC PARKING STALLS ARE ADJACENT TO PUBLIC RIGHTS OF WAY OR PEDESTRIAN PATHS, AN ACCEPTABLE BARRIER SHALL BE INSTALLED TO PREVENT ENCROACHMENT.
3. PARKING STALLS SHALL BE DELINEATED TO THE SATISFACTION OF THE COUNTY ENGINEER.
4. THE NUMBER OF STALLS NECESSARY SHALL BE DETERMINED BY THE CONSERVATION DEVELOPMENT AND PLANNING DEPARTMENT IN CONFORMANCE WITH COUNTY ORDINANCES.
5. ALTERNATE CONFIGURATION AND PAVEMENT SECTION MAY BE CONSIDERED BY THE COUNTY ENGINEER.
6. WHERE THROUGH CIRCULATION DOES NOT EXIST, PROVISIONS FOR TURN AROUND SHALL BE PROVIDED.
7. THE FRONT TWO FEET OF REQUIRED PARKING LENGTH MAY BE USED TO ENLARGE ADJACENT LANDSCAPING BUT NOT USED TO MEET MIN. LANDSCAPING REQUIREMENTS. LANDSCAPING WITHIN OVERHANG SHALL BE LIMITED TO LOW–LYING SHRUBS AND GROUND COVER.
8. A MAXIMUM OF 35% OF THE STALLS IN PARKING LOTS OF MORE THAN TWENTY SPACES MAY BE DESIGNATED FOR COMPACT CARS. THE STALL WIDTH MAY BE REDUCED BY ONE FOOT AND THE STALL LENGTH MAY BE REDUCED BY THREE FEET.
9. STALLS FOR COMPACT CARS SHALL BE CLEARLY DESIGNATED EITHER BY "COMPACT CARS ONLY" STENCILED ON THE PAVEMENT OR AN 18" BY 18" SIGN STANDING SEVEN FEET HIGH WITH THREE INCH LETTERING.
10. PARALLEL PARKING SPACES SHALL BE 8' X 22' WITH THE FOLLOWING EXCEPTIONS:
    A. PARALLEL SPACES ALONG A WALL, FENCE OR HEDGE SHALL BE 10 FEET WIDE.
    B. PARALLEL SPACES HAVING NO OBSTRUCTION OR ADJACENT PARKING SPACE WITHIN TEN FEET OF ONE END MAY REDUCE THE LENGTH TO 20 FEET. IF BOTH ENDS ARE SIMILARLY CLEAR, THE SPACE MAY BE REDUCED TO 18 FEET.

NOT TO SCALE

COUNTY OF NAPA
DEPT. OF PUBLIC WORKS

OFF STREET PARKING

COUNTY ENGINEER RCE 17995

JAN 1999

D-9 HANDICAP SYMBOL

Notes:
Location goal: On shortest accessible route to accessible entrance(s).
Placement goal: Persons with disabilities must not be compelled to wheel or walk behind parked cars other then their own.
Dimensions:
Van: Min 9 feet wide with min 8 feet side loading & unloading *passenger side aisle*, min 18 feet length.
Auto: Min 9 feet wide with min 5 feet wide loading and unloading *passenger side aisle*, min 18 feet long. Two spaces may share the same 5 feet aisle.
Slope: Max 1 vertical to 50 horizontal in any direction.
Signage:
"Van Accessible" for van spaces. Reflectorized International Symbol of Accessibility at each space, min 70 inches sq., min 80 inches high if in path of travel, and unobscured by a parked vehicle. (see symbol below). Tow away sign with telephone number at each entrance to parking area or adjacent to accessible spaces, min size: 17 inches by 22 inches, 1 inch high letters.
Surface Marking: Painted or outlined space in blue and outlined profile view depicting wheelchair with occupant, or 36 inch by 36 inch outlined profile view of wheelchair with occupant in white on blue background visible to traffic enforcement officer when vehicle occupies space.
Curb Ramps: Ramps shall be provided wherever an accessible route crosses a curb. Maximum slope shall be 1:12. Minimum width, exclusive of flares shall be 36 inches.
See current California Title 24, Sections 3105A(n) & 3107A of the California Code of Regulations for further information.

Total Number of Parking Spaces	Handicaped Accessible Spaces
1 – 25	1 van accessible space
26 – 50	2 including 1 van accessible space
51 – 75	3 including 1 van accessible space
76 – 100	4 including 1 van accessible space
101 – 150	5 including 1 van accessible space
151 – 200	6 including 1 van accessible space
201 – 300	7 including 1 van accessible space
301 – 400	8 including 1 van accessible space
401 – 500	9 including 2 van accessible spaces
500 – 1000	2% including 3 van accessible spaces
1001 +	20 + 1 per 100 or fraction, including min 1 van accessible space per 8 accessible spaces or fraction thereof.

International Symbol of Accessibility

NOT TO SCALE

COUNTY OF NAPA
DEPT. OF PUBLIC WORKS

HANDICAP PARKING

COUNTY ENGINEER RCE 51790

JUNE 2011

D-10 WHEEL CHAIR RAMP

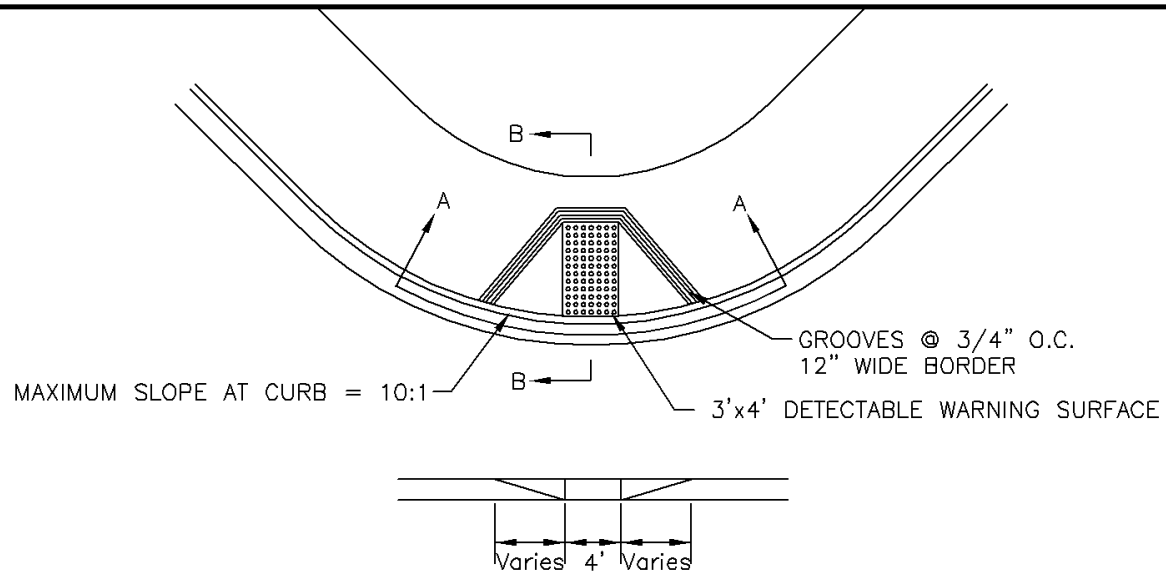

SECTION A–A

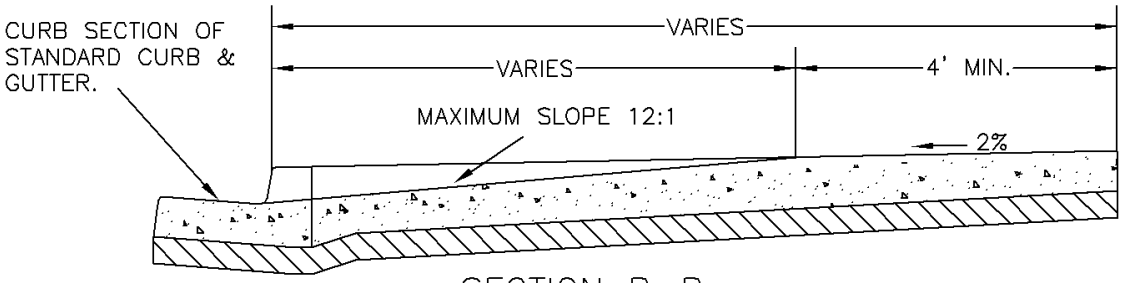

SECTION B–B

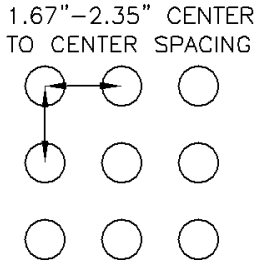

DETECTABLE WARNING SURFACE DETAIL

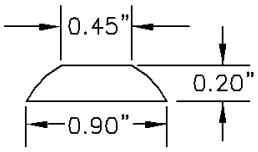

RAISED TRUNCATED DOME DETAIL

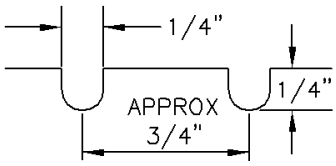

GROOVE DETAIL

NOTES:

1. WHEELCHAIR RAMPS ARE TO BE LOCATED AT THE CENTER OF THE RETURN.
2. RAMP SURFACES THAT ARE NOT GROOVED SHALL BE FINISHED WITH A ROUGHER SURFACE THAN THE SURROUNDING SURFACE.
3. WHEN EXISTING FACILITIES ARE NONCONFORMING OR RIGHT OF WAY LIMITATIONS EXIST, RAMPS MAY BE MODIFIED AS APPROVED BY THE COUNTY ENGINEER. SEE CALTRANS STANDARD PLANS SHEET A88A FOR OPTIONS AND OTHER DETAILS.

NOT TO SCALE

COUNTY OF NAPA
DEPT. OF PUBLIC WORKS

WHEEL CHAIR RAMP

COUNTY ENGINEER RCE 51790

JUNE 2011

D-11 GATED ENTRANCE

① GATE SET BACK SHALL BE 30' MIN. FROM E.O.P. OF ALL ROADS, STREETS AND DRIVEWAYS OR IN THE CASE OF A COUNTY ROAD, 42' MIN. FROM CENTER LINE OF COUNTY ROAD IF IT IS A GREATER DISTANCE THAN 30'.

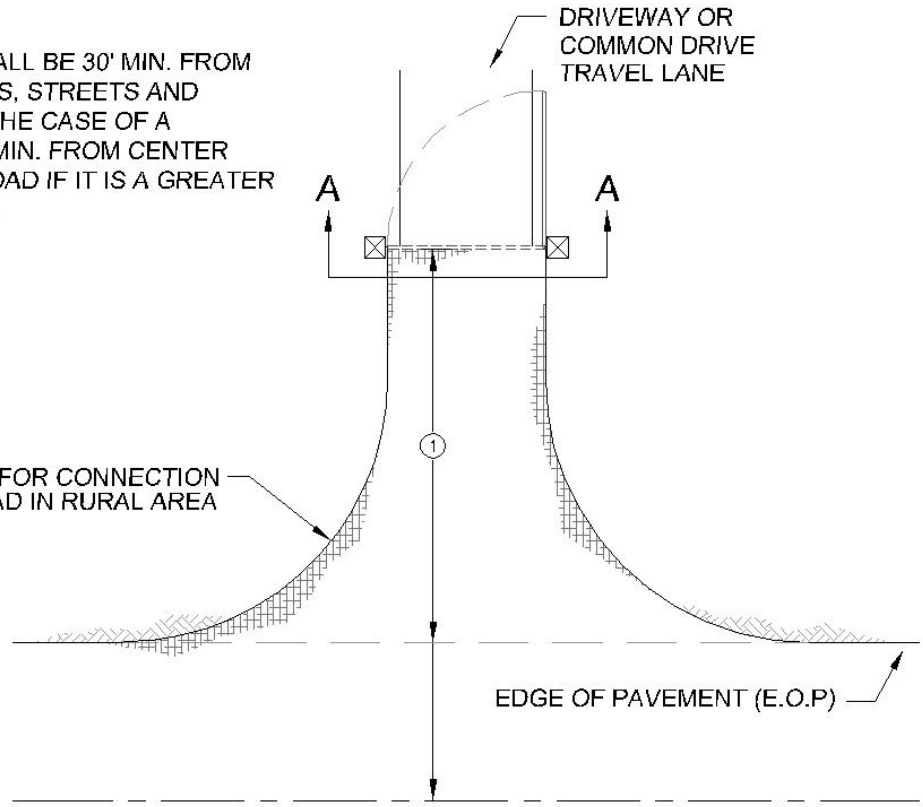

NOTES:

1. FOR GATES THAT SWING TOWARD E.O.P. THE MINIMUM SET BACK SHALL BE A TOTAL OF THE SET BACK DISTANCE PLUS THE TOTAL WIDTH OF THE GATE PLUS 2 FEET.

2. ALL GATES SHALL HAVE A FIRE MARSHALL APPROVED KEY ACCESS:
   a) ELECTRIC GATES SHALL HAVE A KNOX KEY SWITCH MOUNTED TO ACCESS PANEL.

   b) MANUAL GATES SHALL HAVE A KNOX PADLOCK INSTALLED.

3. FOR GATES THAT MEET SET BACK REQUIREMENTS AND ARE STILL IN THE COUNTY RIGHT-OF-WAY, THE PROPERTY OWNER SHALL OBTAIN A RECORDED ENCROACHMENT PERMIT FOR THE GATE STRUCTURE.

4. A GATE INSTALLED ON AN ACCESS ROAD THAT DOES NOT COMPLY WITH CURRENT ROADWAY WIDTH CRITERIA AND THAT IS NOT REQUIRED TO BE IMPROVED SHALL PROVIDE A MINIMUM OF 2 FEET OF HORIZONTAL CLEARANCE WIDER THAN THE ROAD IT SERVES AND IN NO CASE BE LESS THAN 14 FEET IN WIDTH.

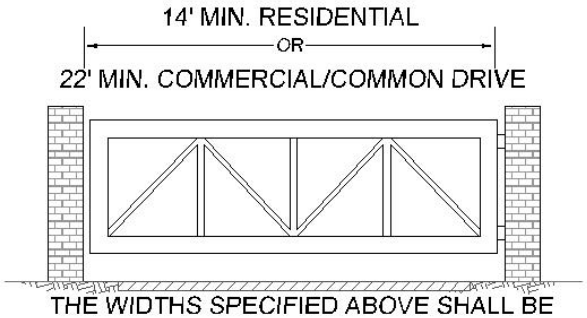

THE WIDTHS SPECIFIED ABOVE SHALL BE UNOBSTRUCTED HORIZONTAL CLEARANCE WHEN GATE IS OPEN.

SECTION A-A

NOT TO SCALE

COUNTY OF NAPA
DEPARTMENT OF PBES

GATED ENTRY

JANUARY 2020

SIGNAGE SIZE AND LOCATION OF ADDRESSES

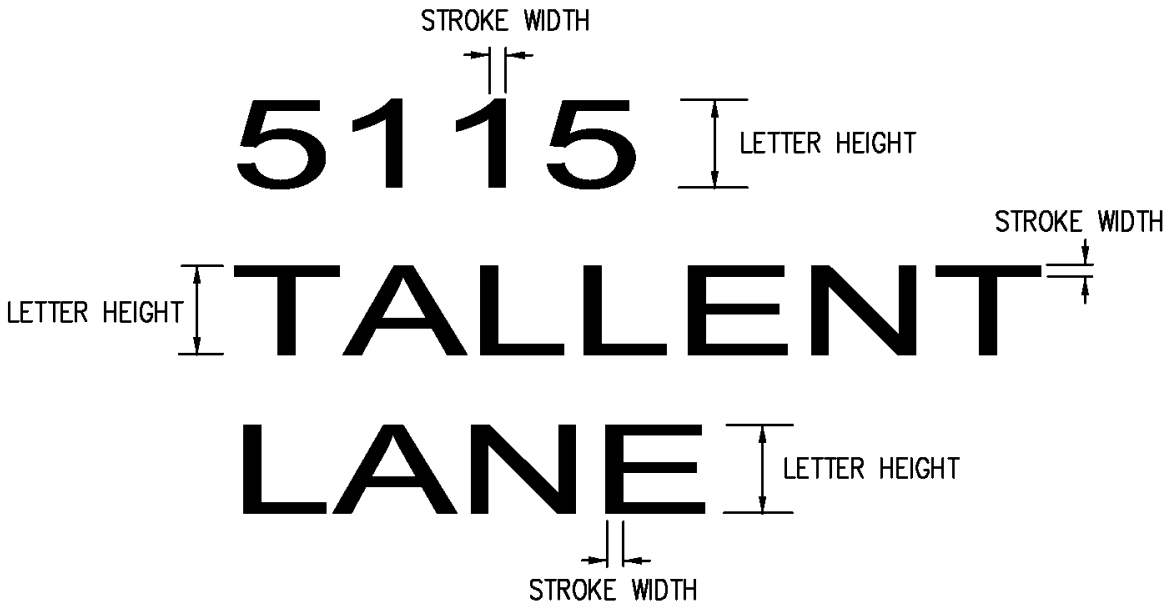

	MINIMUM LETTER HEIGHT	MINIMUM STROKE WIDTH	
RESIDENTIAL	4"	1/2"	LETTERING SHALL BE REFLECTORIZED OR ILLUMINATED AND CONTRASTING WITH THE BACKGROUND COLOR OF THE SIGN.
COMMERCIAL	6"	3/4"	
INDUSTRIAL	12"	1-1/2"	

ADDRESS SIGNAGE NOTES

1. ALL BUILDINGS SHALL HAVE A PERMANENTLY POSTED ADDRESS, WHICH SHALL BE PLACED AT EACH DRIVEWAY ENTRANCE AND VISIBLE FROM BOTH DIRECTIONS OF TRAVEL ALONG THE ROAD. IN ALL CASES, THE ADDRESS SHALL BE POSTED AT THE BEGINNING OF CONSTRUCTION AND SHALL BE MAINTAINED THEREAFTER, AND THE ADDRESS SHALL BE VISIBLE AND LEGIBLE FROM THE ROAD ON WHICH THE ADDRESS IS LOCATED.

2. ADDRESS SIGNS ALONG ONE-WAY ROADS SHALL BE VISIBLE FROM BOTH THE INTENDED DIRECTION OF TRAVEL AND THE OPPOSITE DIRECTION.

3. WHERE MULTIPLE ADDRESSES ARE REQUIRED AT A SINGLE DRIVEWAY, THEY SHALL BE MOUNTED ON A SINGLE POST.

4. WHERE A ROADWAY PROVIDES ACCESS SOLELY TO A SINGLE COMMERCIAL OR INDUSTRIAL BUSINESS, THE ADDRESS SIGN SHALL BE PLACED AT THE NEAREST ROAD INTERSECTION PROVIDING ACCESS TO THAT SITE.

NOT TO SCALE

NAPA COUNTY
FIRE DEPARTMENT

ADDRESS SIGNAGE

FIRE SAFE STANDARDS

SEPTEMBER 2016

APPENDIX

"A"

RESOLUTION NO. 2020-12

A RESOLUTION OF THE NAPA COUNTY BOARD OF SUPERVISORS, STATE OF CALIFORNIA, AMENDING THE NAPA COUNTY ROAD AND STREET STANDARDS TO REFLECT THE CALIFORNIA BOARD OF FORESTRY AND FIRE PROTECTION'S 2020 STATE RESPONSIBILITY AREA FIRE SAFE REGULATIONS; TO PROVIDE A MORE REASONABLE BASIS FOR IMPOSING THE ROAD AND STREET STANDARDS TO SMALL WINERIES AND MINOR MODIFICATIONS OF USE PERMITS; AND TO IMPROVE REGULATORY CLARITY AND UNIFORM APPLICATION OF THE STANDARDS

WHEREAS, the County wishes to have the State Board of Forestry and Fire Protection (the "Board of Forestry") certify amendments to the County's Road and Street Standards ("Road and Street Standards"), all local ordinances, and all relevant Fire Marshal policies related to the Fire Safe Regulations ("Regulations") to ensure they are consistent with the Regulations and thereby maintain local control over the inspection and exception process connected with the enforcement of the Regulations and Road and Street Standards and the other requirements of the Regulations within those portions of unincorporated Napa County that are within the State Responsibility Area as defined in Public Resources Code Sections 4126-4127, and the California Code of Regulations, Title 14, Division 1.5, Chapter 7, Subchapter 2, Article 1 through Article 5; and

WHEREAS, the criteria for the design of road and street improvements in Napa County are set forth in the booklet on file with the Clerk of the Board of Supervisors, entitled "Adopted Road and Street Standards, Napa County (dated April 27, 1971 and as amended through April 23, 2019)," hereinafter referred to as the "Road and Street Standards"; and

WHEREAS, pursuant to Napa County Code Sections 17.02.470 and 17.36.010(B) the Road and Street Standards may be amended from time to time by resolution of the Board of Supervisors; and

WHEREAS, the Road and Street Standards have been revised thirteen times since their adoption on April 27, 1971 and were last revised on April 23, 2019, by Resolution No. 2019-053; and

WHEREAS, the Engineering Division of the Planning, Building and Environmental Services Department and County Fire Marshal have reviewed the Road and Street Standards and recommend that they be amended to establish minimum wildfire protection standards compliant with the Board of Forestry's State Responsibility Area Fire Safe Regulations and to meet the needs of current firefighting apparatus, and to provide a more reasonable basis for imposing the Road and Street Standards on small wineries and minor modifications to winery use permits. In addition, the proposed amendments to the Road and Street Standards will improve regulatory clarity and uniform implementation of the Road and Street Standards by refining existing language to be consistent with existing State requirements, local zoning codes and general plan policies. The proposed amendments to the Road and Street Standards are attached as Exhibit "A" and incorporated here by reference; and

WHEREAS, the proposed amendments to the Road and Street Standards would promote the safety of the public and property by providing safe access for emergency vehicles, safe civilian

NOW, THEREFORE, BE IT RESOLVED that the Board hereby resolves as follows:

1. The Board hereby finds that the proposed amendment to the Road and Street Standards attached as Exhibit "A" are exempt from the California Environmental Quality Act ("CEQA") under the General Rule because it can be seen with certainty that there is no possibility the proposed action may have a significant effect on the environment and therefore the CEQA is not applicable. [See Guidelines For the Implementation of the California Environmental Quality Act, 14 CCR 15061(b)(3).] The Board further finds that the proposed amendment is exempt from the CEQA pursuant to Categorical Exemption Class 8 because it been determined that this type of project does not have a significant effect on the environment. [See Class 8 ("Actions by Regulatory Agencies for Protection of the Environment") which may be found in the guidelines for the implementation of the California Environmental Quality Act at 14 CCR §15308.]

2. The Board hereby adopts the amendments to the Road and Street Standards attached as Exhibit "A" and incorporated here by reference.

3. The provisions of this resolution shall not be applicable to the extent, but only to the extent, that they would violate the constitution or laws of the United States or of the State of California. In the event a property owner contends that application of the Road and Street Standards effects an unconstitutional taking of property, the property owner may request, and the Board of Supervisors may grant, an exception to application of any provision of the Road and Street Standards if the Board of Supervisors finds, based on substantial evidence, that both: (1) the application of any aspect of the Road and Street Standards would constitute an unconstitutional taking of property; and (2) an exception to the Road and Street Standards shall be only to the minimum extent necessary to avoid such a taking. The provisions of this resolution shall not be applicable to any person or entity that has obtained, as of the effective date of this resolution, a vested right, pursuant to State law, to undertake any activities that would be prohibited by this resolution.

3. The Board hereby directs the Clerk of the Board to place a copy of the amendments to Road and Street Standards attached as Exhibit "A" in the booklet entitled "Adopted Road and Street

[REMAINDER OF THIS SPACE INTENTIONALLY LEFT BLANK]

Standards, Napa County (dated April 27, 1971 and as amended through April 23, 2019), on file with the Clerk of the Board.

THE FOREGOING RESOLUTION WAS DULY AND REGULARLY ADOPTED by the Napa County Board of Supervisors, State of California, at a regular meeting of the Board held on the ___ day of February, 2020, by the following vote:

AYES:	SUPERVISORS	WAGENKNECHT, PEDROZA, GREGORY, RAMOS and DILLON
NOES:	SUPERVISORS	NONE
ABSTAIN:	SUPERVISORS	NONE
ABSENT:	SUPERVISORS	NONE

NAPA COUNTY, a political subdivision of the State of California

By: _____
DIANE DILLON, Chair of the Board of Supervisors

APPROVED AS TO FORM Office of County Counsel Deputy County Counsel By: *Laura J. Anderson (e-signature)* Date: January 22, 2020	APPROVED BY THE NAPA COUNTY BOARD OF SUPERVISORS Date: February 4, 2020 Processed By: _____ Deputy Clerk of the Board	ATTEST: JOSE LUIS VALDEZ Clerk of the Board of Supervisors By: _____

H:\ccoun\DOCS\PUBWORKS\Road\Road and Street Standards
RSS Resolution Revisions 2.4.2020.doc